Low Voltage Fuses (LV Fuses)

LFR15R-xA-y Series

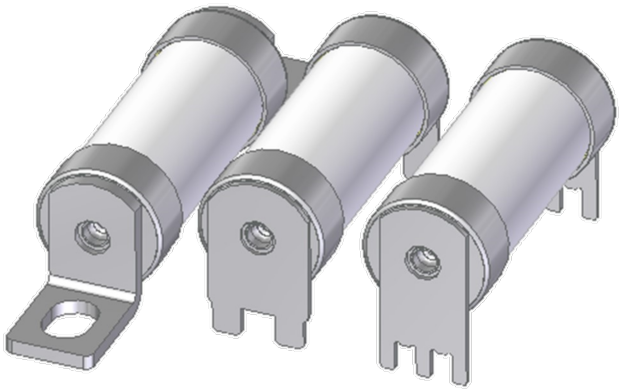

Key Features

- Rated Voltage: 500 VDC/690 VAC
- Breaking Capacity: DC 50 kA/AC 100 kA
- Execution Standard: GB/T 13539.4/7
  IEC 60269-4/7
  UL 248-13
- Fusing Characteristics: High Speed Fuse
- Utilization Category: aR/aBat
- Good Current Limiting Capability
- Body Size:

Φ17.7 x 46.0 mm (BT/BTL Type)
Φ17.7 x 43.8 mm (PT2 Type/25 A-100 A)
Φ17.7 x 43.8 mm (PT3 Type)
Φ17.7 x 46.0 mm (PT2 Type/125 A-200 A)
Φ17.7 x 46.0 mm (PT3A Type)

- RoHS and REACH Compliant, Pb Free

Dimensions (mm)

BT Type

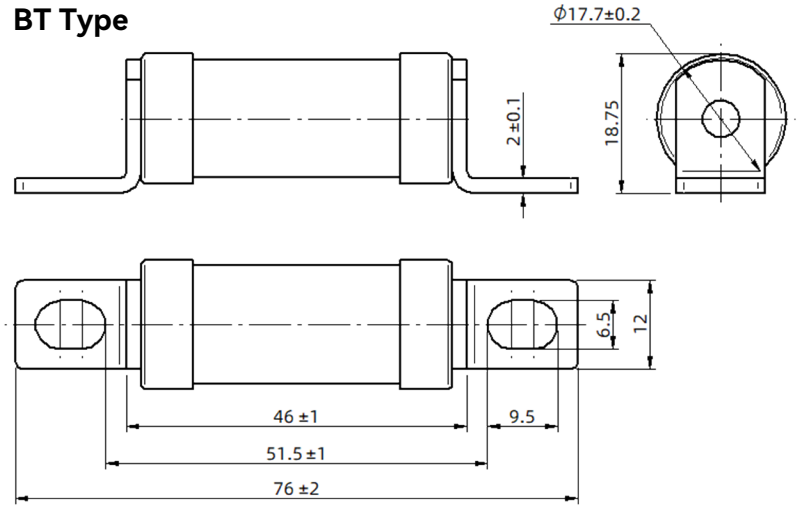

BTL Type

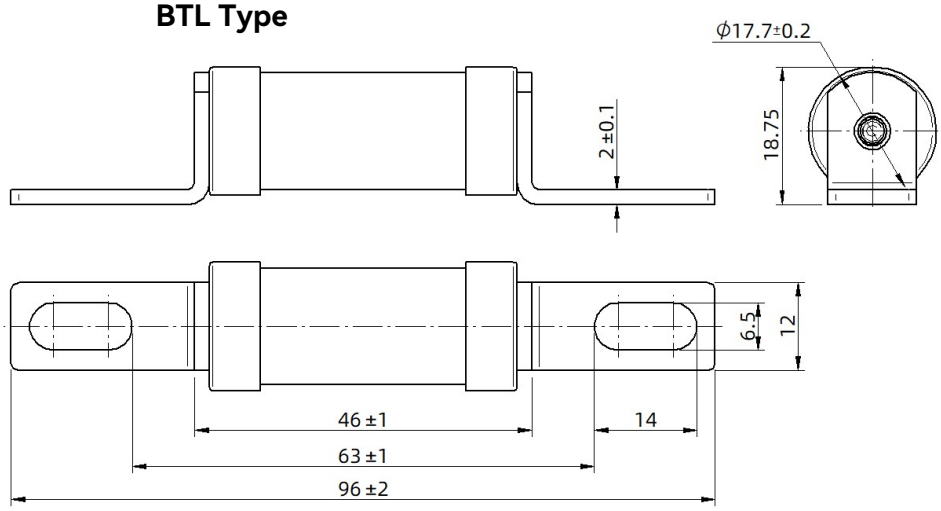

PT2 Type（25 A~100 A）

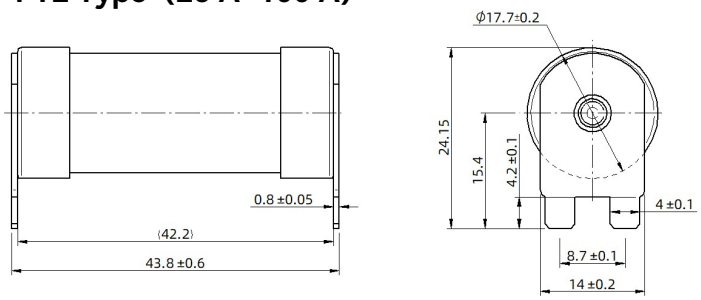

PT2 Type（125 A~200 A）

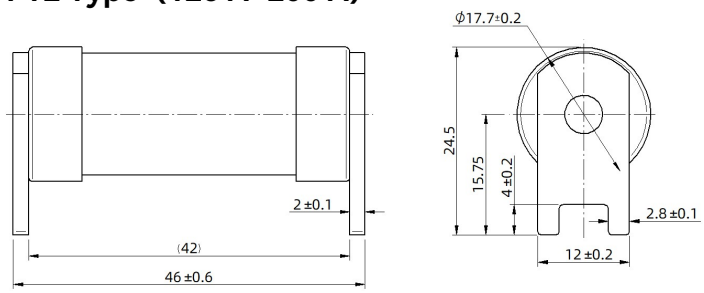

PT3 Type（25 A~100 A）

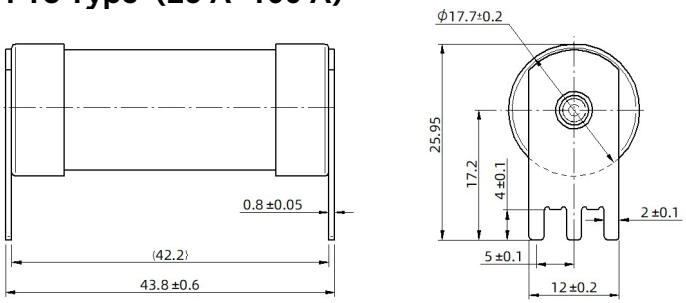

PT3A Type（25 A~125 A）

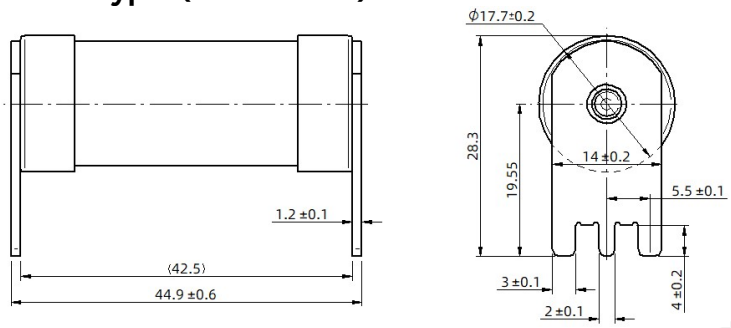

Copyright Belongs to XIAMEN SET Electronics CO. LTD. 2024-2026 V1.0

Specifications

Model	Rated Current I_n	Rated Voltage U_n	Breaking Capacity I_1	Pre-arcing I^2t [a]	Clearing I^2t [a]	Watts loss at I_n	cURus	CCC	CQC	CE	RoHS REACH Pb Free
	(A)	(VDC)	(kA)	(A^2s)	(A^2s)	(W)					
LFR15R-25A-y y=BT/BTL/PT2/ PT3/PT3A	25	500/690	50/100	150	370	5.0	●	◎	◎	◎	●
LFR15R-32A-y y=BT/BTL/PT2/ PT3/PT3A	32	500/690	50/100	270	660	7.5	●	◎	◎	◎	●
LFR15R-40A-y y=BT/BTL/PT2/ PT3/PT3A	40	500/690	50/100	615	1500	7.5	●	◎	◎	◎	●
LFR15R-50A-y y=BT/BTL/PT2/ PT3/PT3A	50	500/690	50/100	960	2350	9.2	●	◎	◎	◎	●
LFR15R-63A-y y=BT/BTL/PT2/ PT3/PT3A	63	500/690	50/100	1700	4100	11.5	●	◎	◎	◎	●
LFR15R-80A-y y=BT/BTL/PT2/ PT3/PT3A	80	500/690	50/100	2600	6500	15.0	●	◎	◎	◎	●
LFR15R-100A-y y=BT/BTL/PT2/ PT3/PT3A	100	500/690	50/100	3700	9300	20.0	●	◎	◎	◎	●
LFR15R-125A-y y=BT/BTL/PT2/ PT3A	125	500/690	50/100	8200	20000	20.0	●	◎	◎	◎	●
LFR15R-150A-y y=BT/BTL/PT2	150	500/690	50/100	12500	31500	24.0	●	◎	◎	◎	●
LFR15R-160A-y y=BT/BTL/PT2	160	500/690	50/100	12500	31500	27.0	●	◎	◎	◎	●
LFR15R-180A-y y=BT/BTL/PT2	180	500/690	50/100	18000	44000	29.0	●	◎	◎	◎	●
LFR15R-200A-y y=BT/BTL/PT2	200	500/690	50/100	24000	58000	32.0	●	◎	◎	◎	●

Note: 1. "a": This value is measured at the rated breaking capacity.

2. "●": Certified, RoHS and REACH compliant, lead-free; "◎": On-going.

3. M6 bolts and nuts are recommended. Recommended installation torque: 6~8 N·m.

4. The minimum breaking capacity: 3 I_n (25 A-100 A), 4 I_n (25 A-125 A, Only PT3A Type), 5 I_n (125 A-200 A).

Copyright Belongs to XIAMEN SET Electronics CO. LTD. 2024-2026 V1.0

Part Numbering System

LFR15R - xA - y

Mounting Type
BT: Bolt Tag (Standard Electrode)
BTL: Bolt Tag (Long Electrode)
PT2: PCB Mount (Two Pins)
PT3: PCB Mount (Three Pins, Standard Electrode)
PT3A: PCB Mount (Three Pins, Thickened and Widened Electrode)

Rated Current
25 A, 32 A, 40 A, 50 A, 63 A, 80 A, 100 A, 125 A, 150 A, 160 A, 180 A, 200 A

Series

Applications

- Frequency Converter
- Inverter
- Rectifier
- Semiconductor Equipment
- Energy Storage System (ESS)
- Power Supply
- Conductor
- Data Center BBU

Agency Information

Rated Current I_n (A)	Agency Symbol	Standards	The File No. and certification No. obtained by SETsafe | SETfuse	Utilization Category	Remark
25 ~ 200	c UL us	UL 248-13	E532248	aR	DC Certified AC On-gong
		GB/T 13539.4	On-going	aR	AC
		GB/T 13539.7	On-going	aBat	DC
	CE	EN IEC 60269-4	On-going	aR	AC
		EN IEC 60269-7	On-going	aBat	DC

Power Dissipation Curve (For Reference Only)

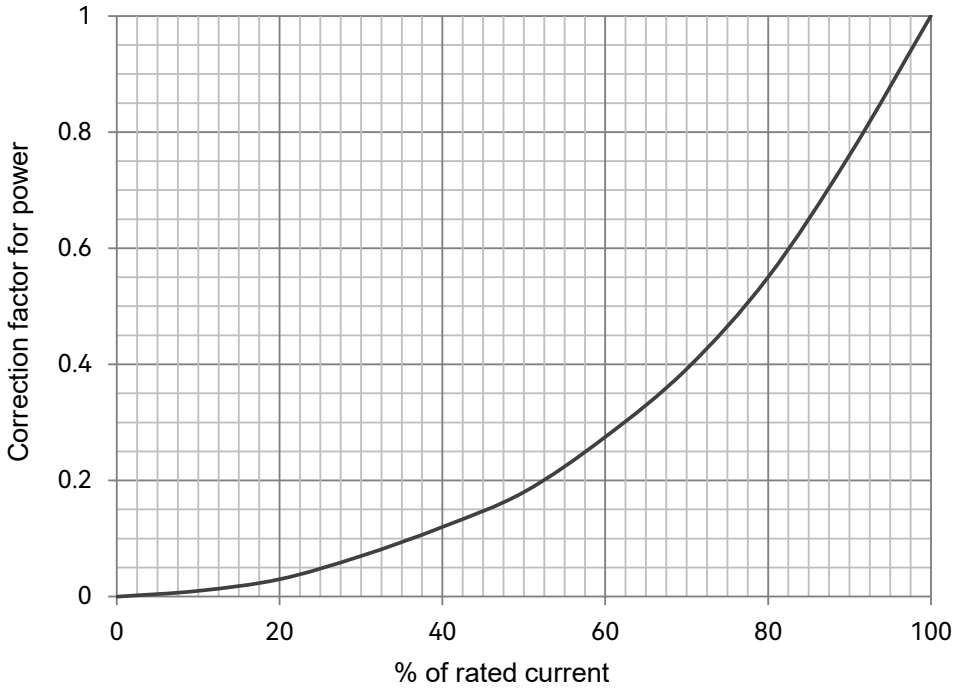

Copyright Belongs to XIAMEN SET Electronics CO. LTD. 2024-2026 V1.0

Time-Current Characteristics (For Reference Only)

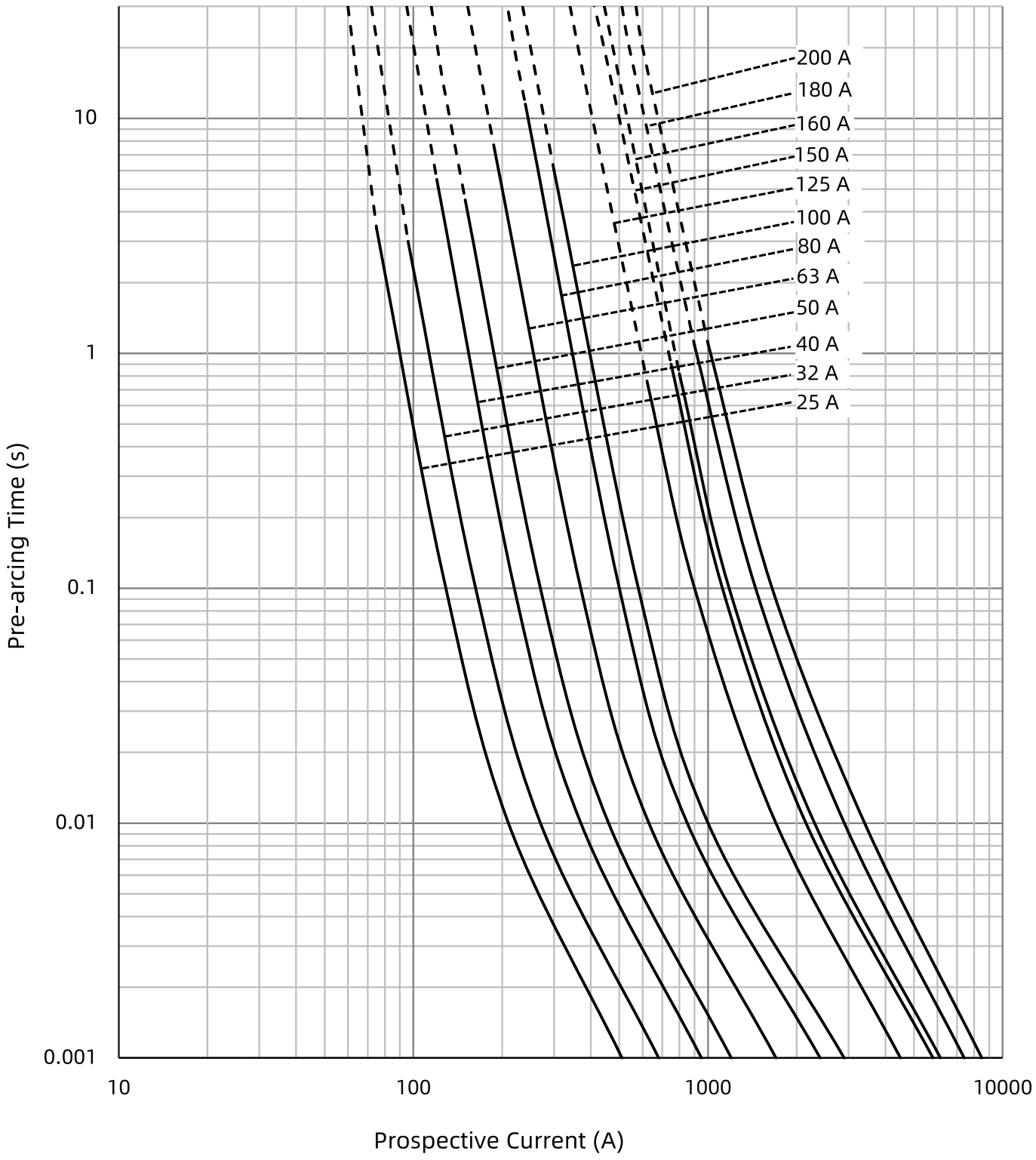

Copyright Belongs to XIAMEN SET Electronics CO. LTD. 2024-2026 V1.0

Truncated Current Curve (For Reference Only)

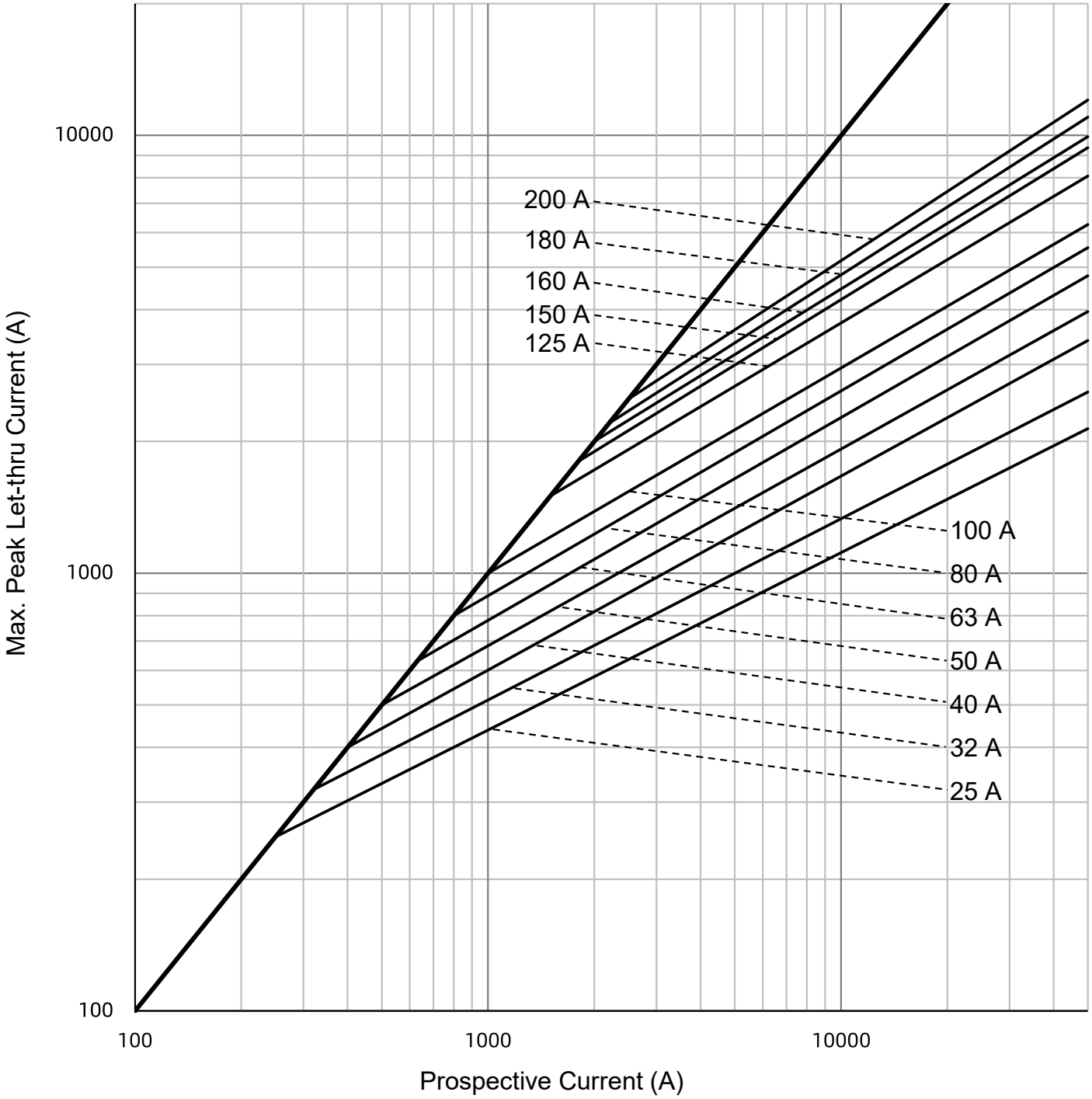

Copyright Belongs to XIAMEN SET Electronics CO. LTD. 2024-2026 V1.0

Packaging

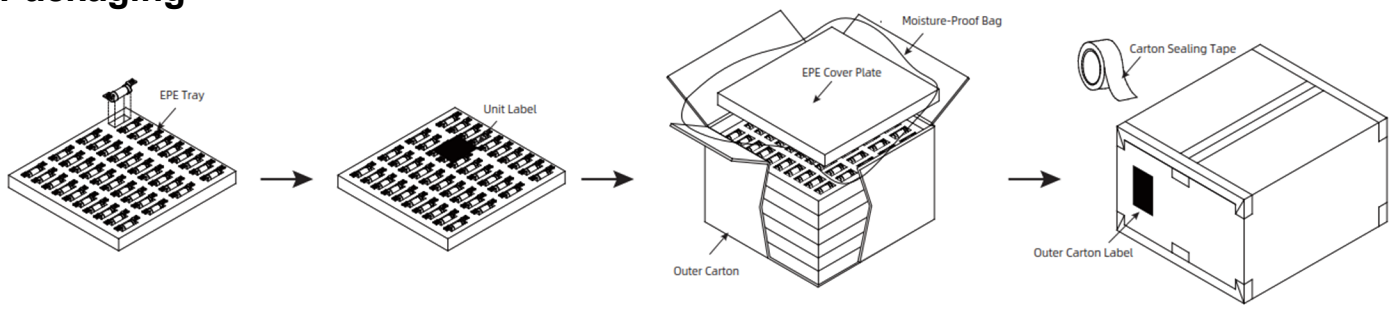

BT Type			
Item	EPE Tray		Carton
Product Quantity (PCS)	40		240
Product Weight（g）	39.5±1.0	Gross Weight（kg）	10.5±1.0

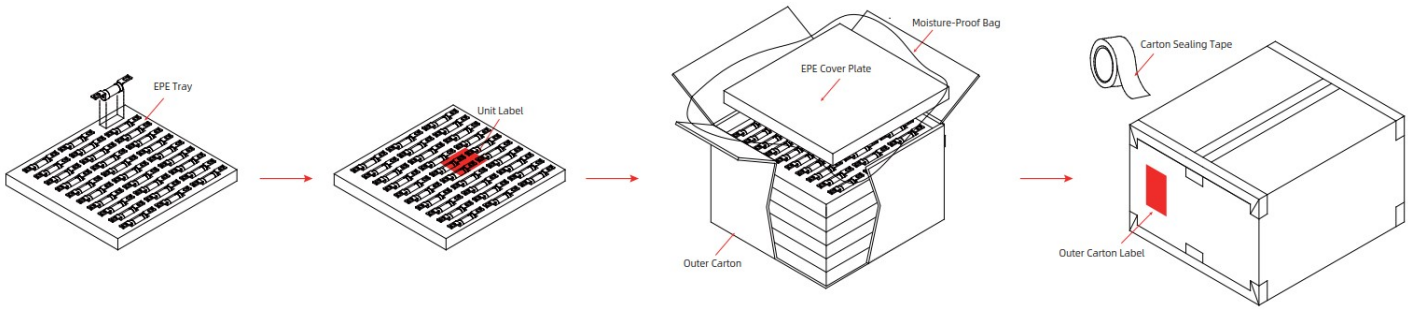

BTL Type			
Item	EPE Tray		Carton
Product Quantity (PCS)	30		180
Product Weight（g）	44.0±1.0	Gross Weight（kg）	9.2±1.0

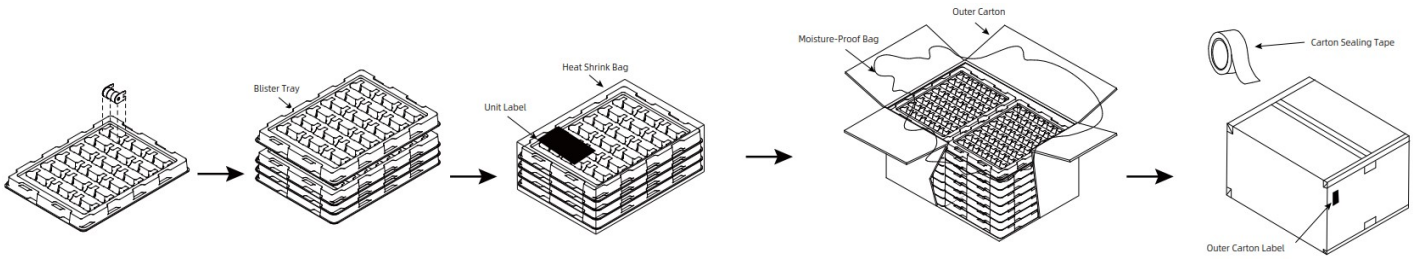

PT2＆PT3＆PT3A Type			
Item	Blister Tray	One Loop	Carton
Product Quantity (PCS)	18	54	216
PT2＆PT3（25 A~100 A）Product Weight（g）	32.5±1.0	Gross Weight（kg）	8.5±1.0
PT2（125 A~200 A）Product Weight（g）	38.0±1.0	Gross Weight（kg）	9.5±1.0
PT3A Product Weight（g）	35.0±1.0	Gross Weight（kg）	8.8±1.0

Copyright Belongs to XIAMEN SET Electronics CO. LTD. 2024-2026 V1.0

Rated Current Derating Curve

Ambient Temperature (For Reference Only)

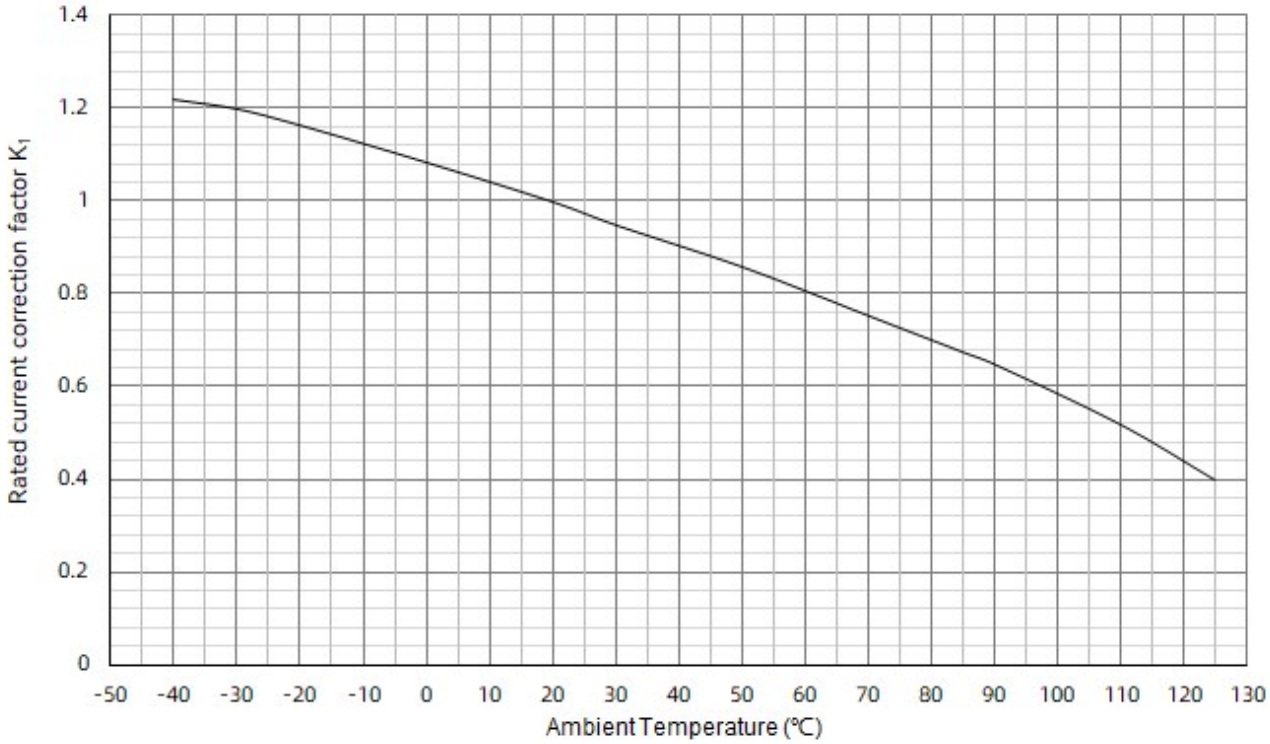

Connecting Conductor (For Reference Only)

The current density of copper bar for fuse installation is suggested to be 1.3 A/mm^2. If the carrying current density of copper bar is greater than 1.3 A/mm^2, it is recommended to reduce the rated current of fuse appropriately.

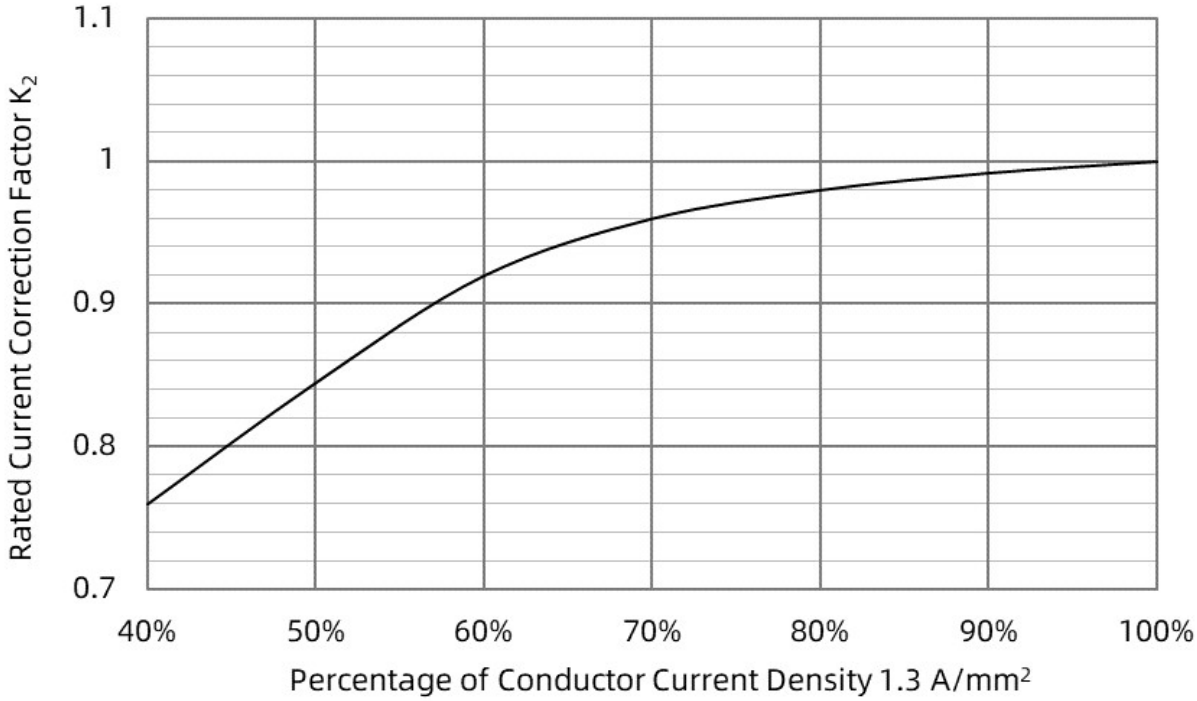

Copyright Belongs to XIAMEN SET Electronics CO. LTD. 2024-2026 V1.0

Cooling Air (For Reference Only)

When the fuse operates in the environment with cooling air, the rated current value of the fuse needs to be corrected.

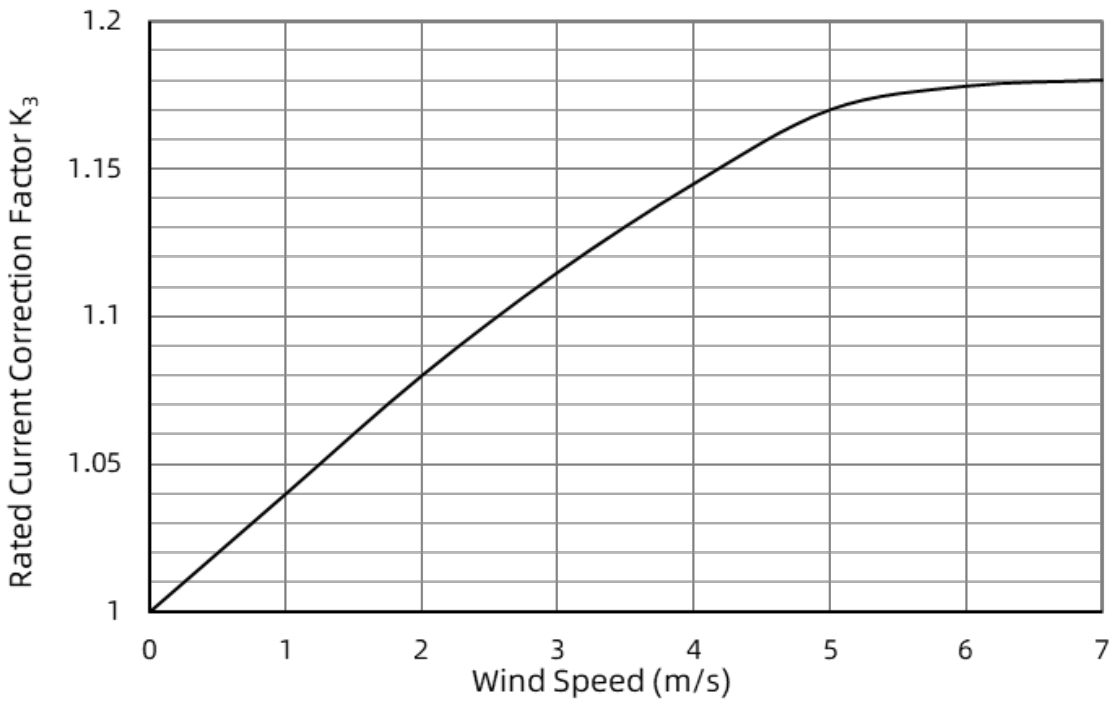

Altitude (For Reference Only)

Altitude (m)	Derating Factor K_4
2000	1.000
2500	0.975
3000	0.950
3500	0.925
4000	0.900
4500	0.875
5000	0.850

Rated Current:

$$I_n \geq \frac{K_0 I_c}{K_1 K_2 K_3 K_4 K_5}$$

I_c — Long-term continuous operating current

K_0 — Reliability factor: 1.2 (Reference DL/T 5044-2014)

K_1 — Ambient temperature correction factor

K_2 — Correction factor for connecting conductors

K_3 — Cooling air correction factor

K_4 — Altitude correction factor

K_5 — Closed environment correction factor, for the better heat dissipation conditions of the box to take 0.9 ~ 0.95, while for the poorer take 0.8

Copyright Belongs to XIAMEN SET Electronics CO. LTD. 2024-2026 V1.0

ATTENTION

Replacement

The fuse is a non-resettable product, for safety reasons, lease ensure that the spare fuse is same model.

Installation Position

Do not install the fuse on an assembly that may often subject to severe continuous vibration or with corrosive gases (NH_3, SO_2, Cl_2 etc.).

Transportation

During packaging and transportation, rain and snow and mechanical damage shall be avoided.

Storage Conditions and Effective Date

- Storage temperature: -10 ° C~40 ° C.
- Storage humidity: < 75 %RH.
- Sealed in a place with no sunshine no pollution and without corrosive gases(NH_3,SO_2,Cl_2, etc.).
- Validity period: 12 consecutive months after you receive it.

Copyright Belongs to XIAMEN SET Electronics CO. LTD. 2024-2026 V1.0

Glossary

Item	Description
Fuse	Device that by the fusing of one or more of its specially designed and proportioned components opens the circuit in which it is inserted by breaking the current when this exceeds a given value for a sufficient time. —(IEC 60269-1)
Rated Current of a fuse-link I_n	Value of current that fuse-link can carry continuously without deterioration under specified conditions. —(IEC 60269-1)
Prospective Current (of a circuit and with respect to a fuse)	Current that would flow in the circuit if each pole of the fuse were replaced by conductor of negligible impedance. —(IEC 60269-1)
Rated Voltage U_n	A maximum open circuit voltage in which a fuse can be used, yet safely interrupt an overcurrent. Exceeding the voltage rating of a fuse impairs its ability to clear an overload or short circuit safely. —(IEC 60269-1)
Ampere Squared Seconds I^2t	The melting, arcing, or clearing integral of a fuse, termed I^2t, is the thermal energy required to melt, arc, or clear a specific current. It can be expressed as melting I^2t, arcing I^2t or the sum of them, clearing I^2t. —(IEC 60269-1)
Time-current Characteristics	Current giving the time, e.g. pre-arcing time or operating time as a function of the prospective current under stated conditions of operation. —(IEC 60269-1)
Breaking Capacity	Value of prospective current that a fuse is capable of breaking at a stated voltage under prescribed conditions of use and behavior. —(IEC 60269-1)
Breaking Range	Breaking range is a range of prospective currents within which the breaking capacity of a fuse-link is assured. —(IEC 60269-1)
Pre-arcing Time / Melting Time	Interval of time between the beginning of a current large enough to cause a break in the fuse-element(s) and the instant when an arc is initiated. —(IEC 60269-1)
Arcing Time	Interval of time between the instant of the initiation of the arc in a fuse and the instant of final arc extinction in that fuse. —(IEC 60269-1)
Operating Time / Total Clearing Time	Sum of the pre-arcing time and the acting time. —(IEC 60269-1)
Power Dissipation (in a fuse-link)	Power released in a fuse-link carrying a stated value of electric current under prescribed conditions of use and behavior. —(IEC 60269-1)
Correction Factor of Rated Current	When the application environment and working conditions exceed in the conditions specified in the standard, for the purpose of matching the working current and long service life of the fuse, the rating of fuse should be corrected by a correction factor. Consult the fuse manufacturer for specific application recommendations. —(IEC 60269-1)
Cut-off Current	Maximum instantaneous value reached by the current during the breaking operation of a fuse-link when it operates in such a manner as to prevent the current from reaching the otherwise attainable maximum. —(IEC 60269-1)
Cut-off Current Characteristic/ Let-through Current Characteristic	Curve giving the cut-off current as a function of the prospective current under stated conditions of operation. —(IEC 60269-1)

Copyright Belongs to XIAMEN SET Electronics CO. LTD. 2024-2026 V1.0