OTCO
Organic Thermal-Link

RT Series I_r : 15 / 16 A

Description

SETsafe | SETfuse Organic Thermal-Link (OTCO) RT series are non-resettable protective device, functioning one time only. It mainly consists of metal case, spring, sliding contact and thermal pellet. When the Thermal-Link senses abnormal heat and temp. reaches the predetermined fusing temp., thermal pellet melts and the sliding contact separates from the isolated lead with the assistance of the trip spring, thereby the circuit is disconnected. OTCO RT series are designed for higher current applications, widely used in electrical equipment to provide over temp. protection, comply with RoHS and REACH.

Construction

Before Functioning

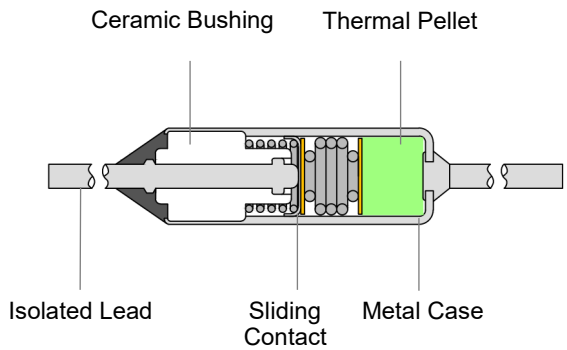

After Functioning

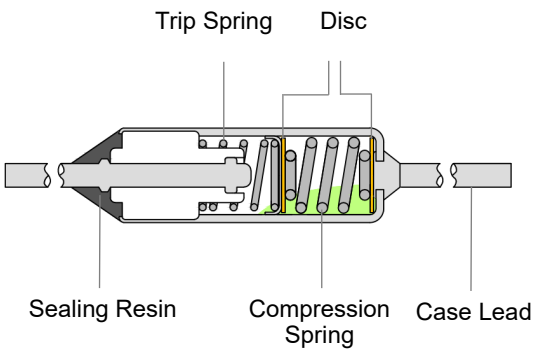

Functioning Principle:

Under normal operating temp., the solid thermal pellet keeps the isolated lead connected to the sliding contact. When the Thermal-Link senses abnormal heat and temp. reaches the predetermined fusing temp., thermal pellet melts and the sliding contact separates from the isolated lead with the assistance of the trip spring, thereby the circuit is disconnected.

Features

- Compact Size
- Metal Case
- Organic Thermal Pellet
- Non-Resettable
- High Accuracy of Functioning Temp.
- Low Resistance
- RoHS & REACH

Customization

- Other Temp.
- The Length of Lead
- Lead Cutting
- Lead Forming

Applications

- Small Home Appliances (Such as Electric Cooker, Bread Maker, Coffee Machine, Soymilk Machine, etc.)
- Comfort Home Appliances (Such as Washing Machine, Refrigerator, Air Conditioner, etc.)
- Personal Care Appliances (Such as Hair Dryer, Hair Straightener, Electric Iron, etc.)
- Commercial Appliances (Such as Printer, Scanner, Fax Machine etc.)
- Automobile Field (Such as Air Conditioner, Heated Seat, etc.)

All Rights Reserved by Xiamen SET Electronics Co., Ltd. 2021-2023 V2.0

Dimensions (mm)

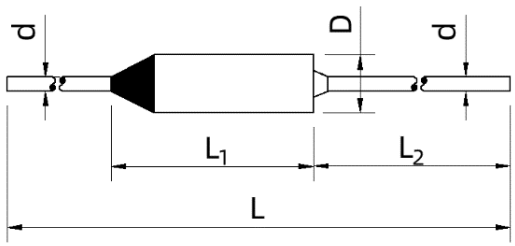

Lead Length	L	L_1	L_2	D	d
Standard	65 ± 3	15 Max.	35 ± 2	Φ 4 ± 0.2	Φ 1 ± 0.1
Long	81 ± 3	15 Max.	35 ± 2	Φ 4 ± 0.2	Φ 1 ± 0.1
Option	Customi-zation	15 Max.	Customi-zation	Φ 4 ± 0.2	Φ 1 ± 0.1

Marking

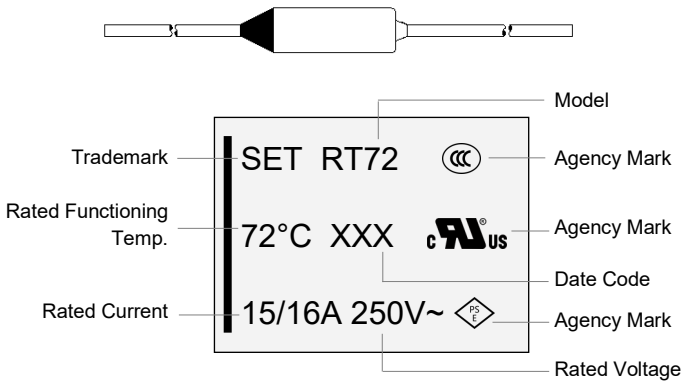

Note:

The first letter of date code represents the year, letter A represents 2000, letter B represents 2001, and so on. The last two digits represent the quarter, the quarter code is represented by 01, 02, 03 and 04, representing the four quarters of the year.

Agency Approvals

Agency	Standards	File No.
	UL60691	E214712
	CAN-CSA-E60691	E214712
	EN60691	40052266
	J60691	JET2121-32001-2011 JET2121-32001-2012 JET2121-32001-2013 JET2121-32001-2014 JET2121-32001-2015 JET2121-32001-2016 JET2121-32001-2017 JET2121-32001-2018 JET2121-32001-2019 JET2121-32001-2020
	KC60691	SU05023-19006A SU05023-19007A SU05023-19008A SU05023-19009B SU05023-19010A
	GB/T 9816	2020980205000192

Part Numbering System

OTCO - RT72 - L S A B - 001

Other Options

Packaging
B: Bulk
R: Tape and Reel

Leads Forming
A: Straight Lead
B: Single Lead Bending
C: Leads Bending

Lead Length
S: Standard
L: Long
O: Option

Process of Mark
L: Laser

Rated Functioning Temp.
refer to specifications

Series
RT

Product Category

All Rights Reserved by Xiamen SET Electronics Co., Ltd. 2021-2023 V2.0

Glossary

Item	Description
TCO	**Thermal-Link** A non-resettable device incorporating a THERMAL ELEMENT which will open a circuit once only when exposed for a sufficient length of time to a temp. in excess of that for which it has been designed.
OTCO	**Organic Thermal-Link** Organic type Thermal-Link, organic is the THERMAL ELEMENT.
T_f	**Rated Functioning Temp.** The temp. of the Thermal-Link which causes it to change its state of conductivity with a detection current up to 10 mA as the only load. Tolerance: T_f + 0 / - 10 K (GB/T 9816, EN60691, UL60691, KC60691). Tolerance: T_f ± 7 K (J60691).
Fusing Temp.	The temp. of the Thermal-Link which causes it to change its state of conductivity is measured with silicone oil bath in which the temp. is increased at the rate of 0.5 K/min to 1 K/min, with a detection current up to 10 mA as the only load.
T_h	**Holding Temp.** The max. temp. of the Thermal-Link at which it will not change its state of conductivity during 168 hours at the rated current.
T_m	**Max. Temp. Limit** The temp. of the Thermal-Link stated by the manufacturer, up to which the mechanical and electrical properties of the Thermal-Link, having changed its state of conductivity, will not be impaired for a given time.
I_r	**Rated Current** The current used to classify a Thermal-Link.
U_r	**Rated Voltage** The voltage used to classify a Thermal-Link.
I_n	**Nominal Discharge Current** Being able to withstand 15 peak currents of waveform 8/20 μs to test the product's durability of withstanding pulse current.
I_{max}	**Max. Discharge Current** Being able to withstand 1 peak current of waveform 8/20 μs to test max. pulse current that the product can withstand.

All Rights Reserved by Xiamen SET Electronics Co., Ltd. 2021-2023 V2.0

OTCO
Organic Thermal-Link

RT Series I_r : 15 / 16 A

Model	T_f	Fusing Temp.	T_h	T_h (UL/cUL)	T_m	I_r	U_r	I_n	I_{max}	UL	cUL	VDE	PSE	KC	CCC	RoHS & REACH
	(°C)	(°C)	(°C)	(°C)	(°C)	(A)	(VAC)	(kA)	(kA)							
RT72	72	69 ± 2	42	57	180	15 / 16	250	1.5	3	●	●	●	●	N / A	●	●
RT77	77	74 ± 2	50	62	300	15 / 16	250	1.5	3	●	●	●	●	N / A	●	●
RT84	84	82 ± 2	54	69	200	15 / 16	250	1.5	3	●	●	●	●	●	●	●
RT94	94	89 ± 2	64	79	300	15 / 16	250	1.5	3	●	●	●	●	●	●	●
RT99	99	95 ± 2	69	84	200	15 / 16	250	1.5	3	●	●	●	●	●	●	●
RT104	104	102 ± 2	74	89	250	15 / 16	250	1.5	3	●	●	●	●	●	●	●
RT110	110	108 ± 2	82	95	240	15 / 16	250	1.5	3	●	●	●	●	●	●	●
RT117	117	114 ± 2	88	102	200	15 / 16	250	1.5	3	●	●	●	●	●	●	●
RT121	121	118 ± 2	93	106	300	15 / 16	250	1.5	3	●	●	●	●	●	●	●
RT128	128	124 ± 2	98	113	200	15 / 16	250	1.5	3	●	●	●	●	●	●	●
RT134	134	131 ± 2	104	119	250	15 / 16	250	1.5	3	●	●	●	●	●	●	●
RT144	144	141 ± 2	114	129	300	15 / 16	250	1.5	3	●	●	●	●	●	●	●
RT152	152	149 ± 2	122	137	205	15 / 16	250	1.5	3	●	●	●	●	●	●	●
RT167	167	164 ± 2	137	152	220	15 / 16	250	1.5	3	●	●	●	●	●	●	●
RT172	172	170 ± 2	143	157	260	15 / 16	250	1.5	3	●	●	●	●	●	●	●
RT184	184	181 ± 2	154	169	250	15 / 16	250	1.5	3	●	●	●	●	●	●	●
RT192	192	190 ± 2	162	177	300	15 / 16	250	1.5	3	●	●	●	●	●	●	●
RT216	216	213 ± 2	186	200	450	15 / 16	250	1.5	3	●	●	●	●	●	●	●
RT229	229	227 ± 2	200	200	450	15 / 16	250	1.5	3	●	●	●	●	●	●	●
RT240	240	236 ± 2	200	205	450	15 / 16	250	1.5	3	●	●	●	●	●	●	●
RT257	257	254 ± 2	200	220	480	15 / 16	250	1.5	3	●	●	●	●	●	●	●
RT263	263	261 +2 / -4	N / A	220	480	15 / 16	250	1.5	3	●	●	○	○	○	○	◑

Note:

1. ″●″ Means OTCO has gained the certification.

   ″○″ Means OTCO hasn't gained the certification.

2. For T_h test, UL / cUL standard recommends the thermocouples to monitor the temp. of OTCO body, while other standards recommend the thermocouples to monitor the environment temp. in the oven.
3. OTCO RT series with a T_f rating 175°C and above comply with UL conductive heat aging (CHAT) requirements.
4. RT263 comply with RoHS but does not comply with REACH.

All Rights Reserved by Xiamen SET Electronics Co., Ltd. 2021-2023 V2.0

Temp. Rise

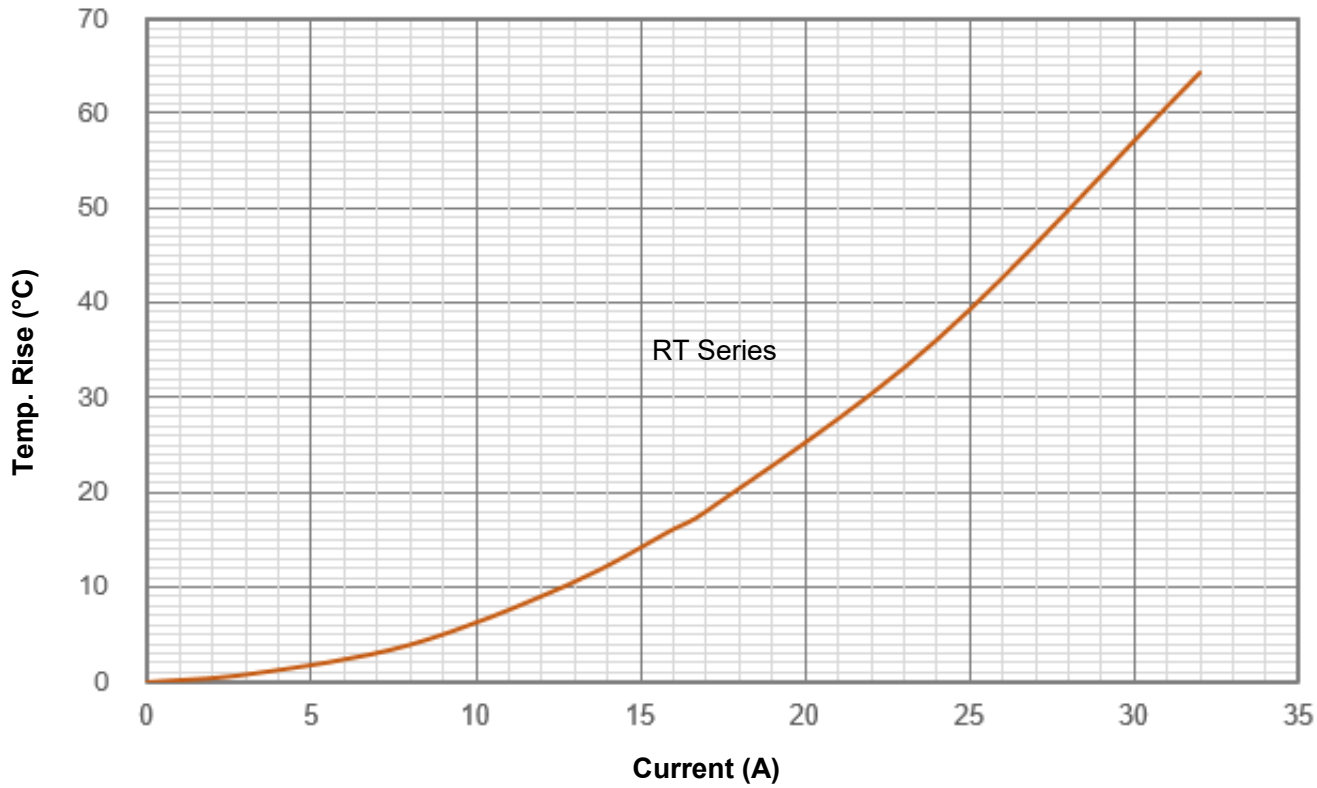

Response Time

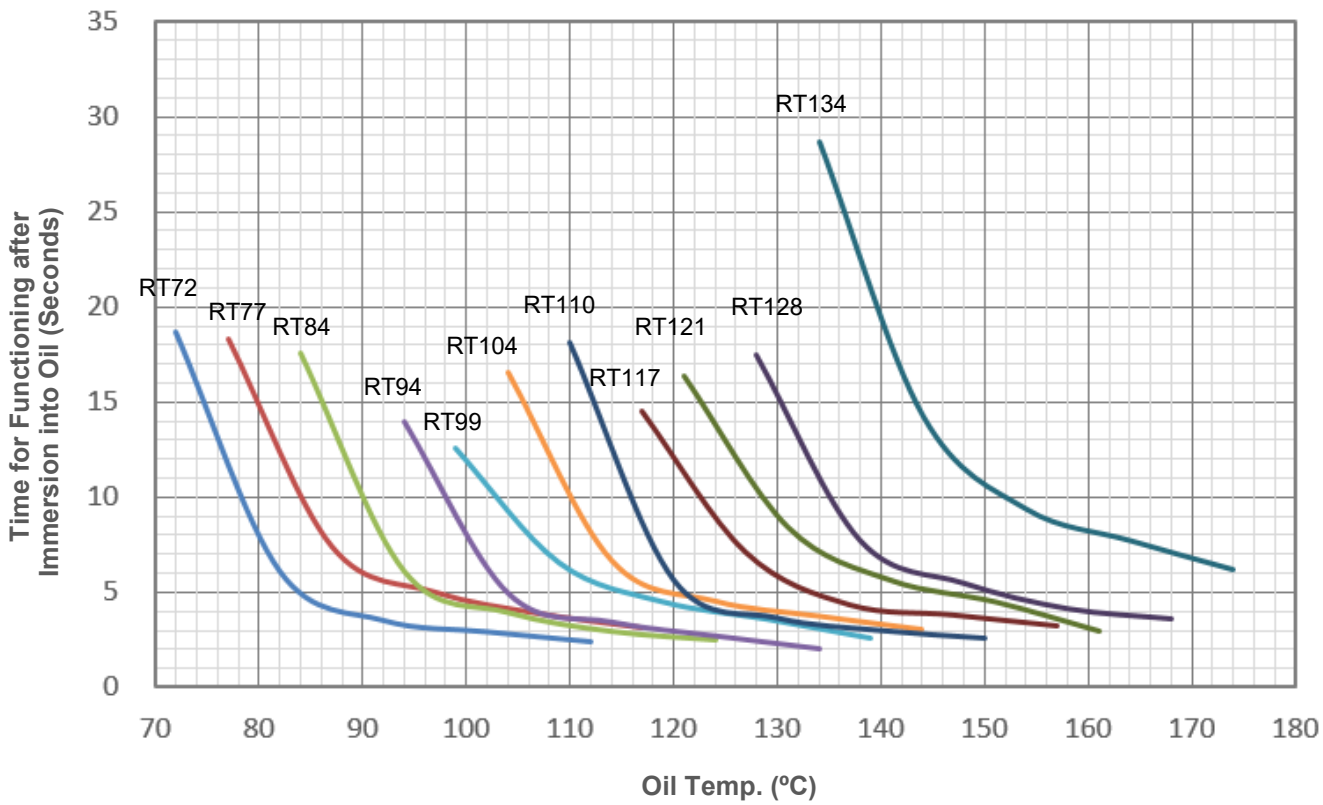

All Rights Reserved by Xiamen SET Electronics Co., Ltd. 2021-2023 V2.0

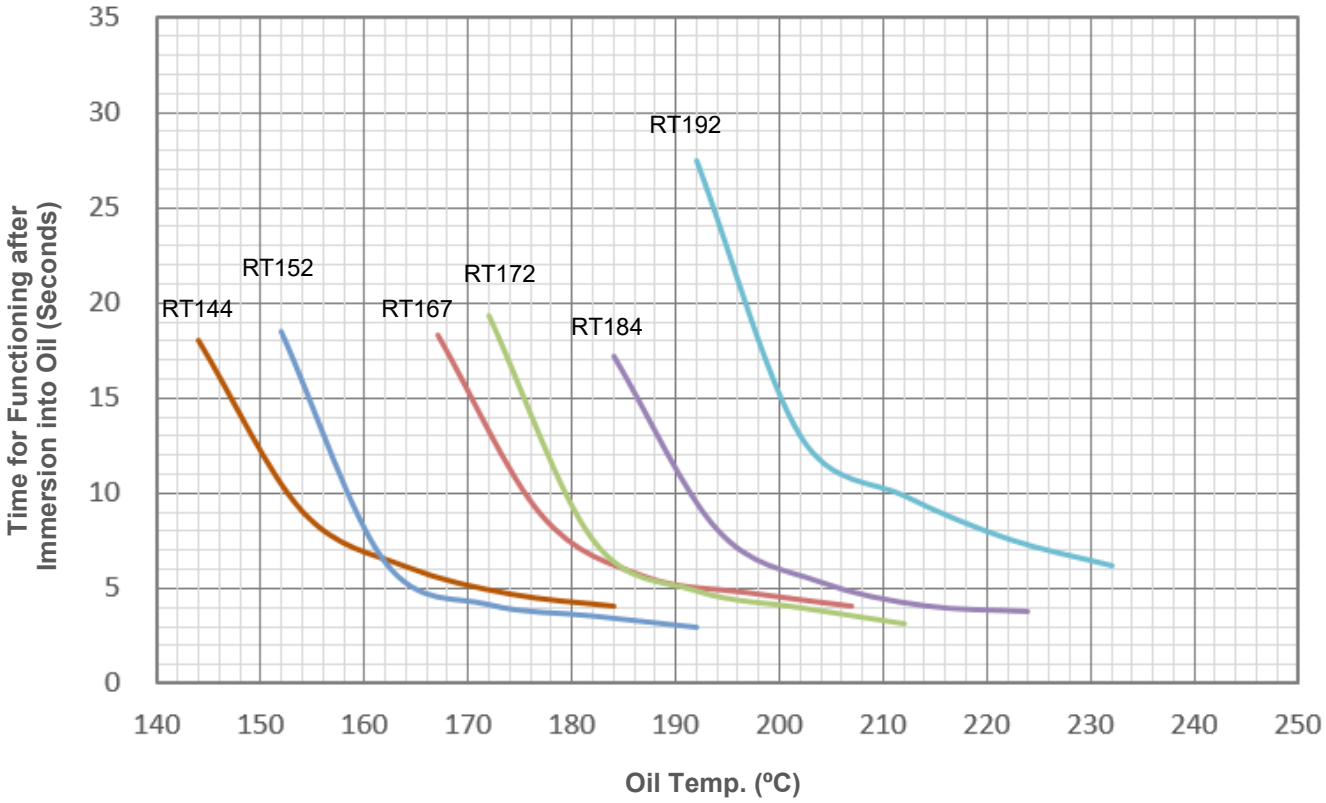

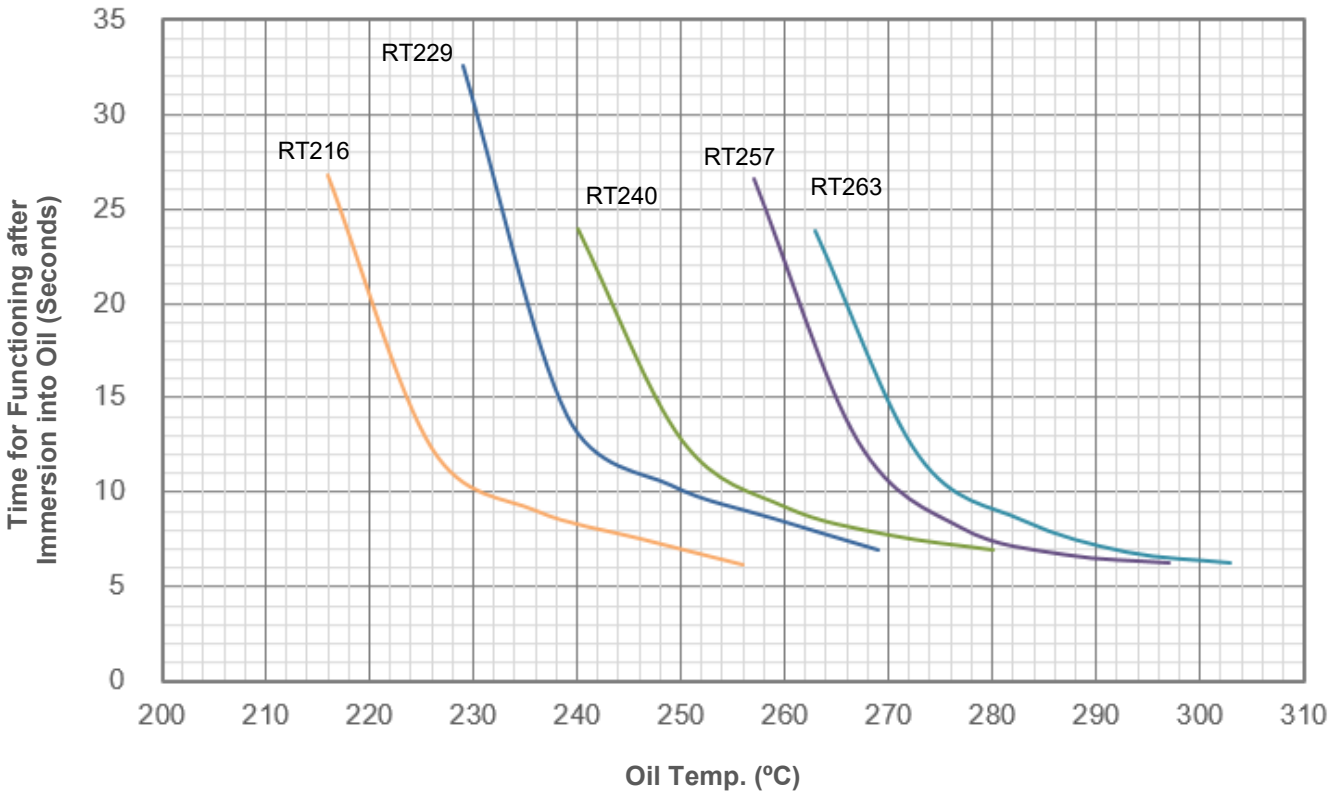

All Rights Reserved by Xiamen SET Electronics Co., Ltd. 2021-2023 V2.0

Packaging Information (Take standard lead length for example)

Bulk Packaging

Item	PE Bag	PE Bag	Carton
Dimensions (mm)	135 x 85	220 x 190	346 x 316 x 156
Quantity (PCS)	100	1,000	10,000
Gross Weight (kg)			11 ± 10%

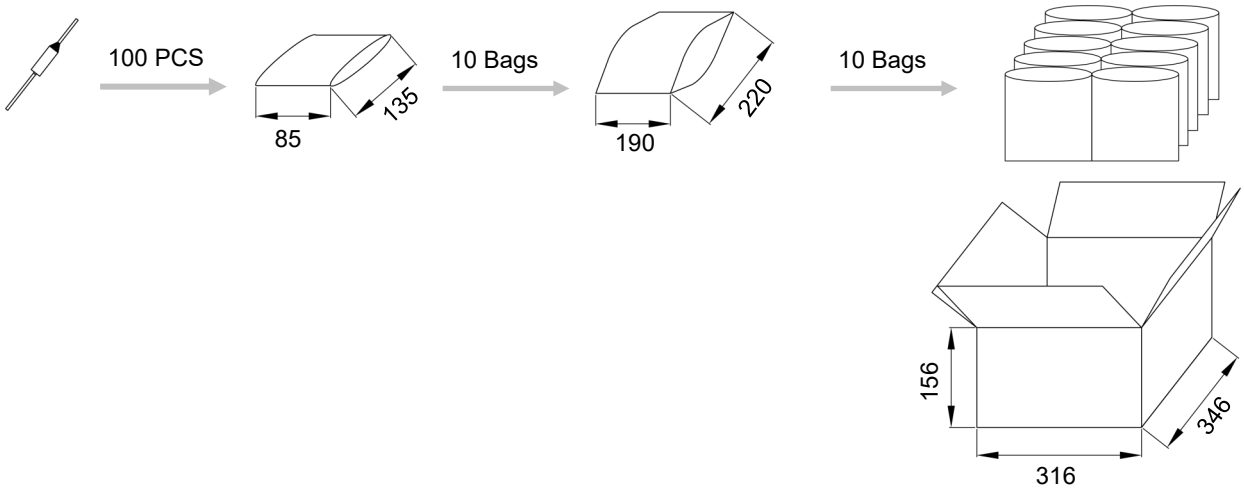

Tape and Reel Packaging

Tape

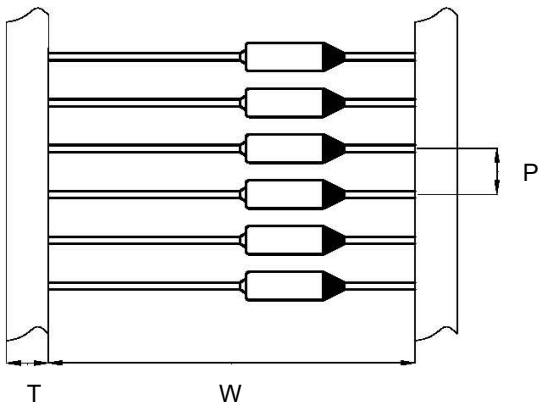

Item	Dimensions (mm)
W	53 ± 2
T	6 ± 1
P	5 ± 0.5

All Rights Reserved by Xiamen SET Electronics Co., Ltd. 2021-2023 V2.0

Reel

Item	Reel	Box	Carton
Dimensions (mm)	Φ 250 x Φ 85 x 70	258 x 258 x 98	455 x 315 x 285
Quantity (PCS)	2,000	2,000	8,000
Gross Weight (kg)			10.3 ± 10%

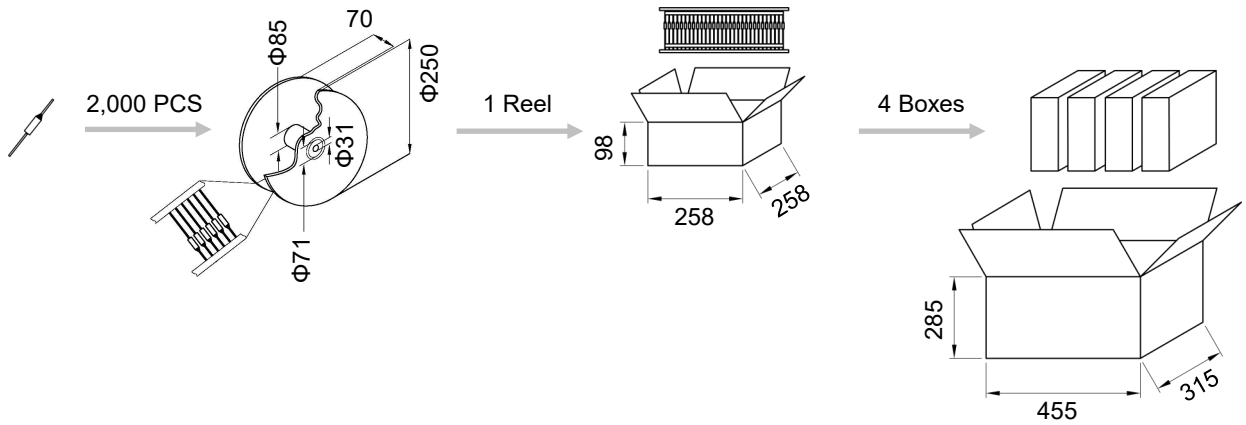

All Rights Reserved by Xiamen SET Electronics Co., Ltd. 2021-2023 V2.0

ATTENTION

Usage

1. Please use OTCO without exceeding the rated current and voltage.
2. Do not use the OTCO in environments out of the standard specifications, such as those containing sulfur dioxide gas, nitrogen oxide gas, ammonia gas or formic acid. It is also not suitable for using in high humidity environment or immersed in liquid.

Replace

OTCO is a non-repairable product. For safety aspect, it shall be replaced by an equivalent OTCO from the same manufacturer, and mounted in the same way.

Storage

1. OTCO must be kept in a place with no sunshine or corrosive gas, the temperature shall be within -10 °C ~ 30 °C and humidity within 30 % ~ 75 %. The validity storage period of OTCO is 12 months after purchase.
2. The case and isolated lead of OTCO are silver-plated. Therefore, to avoid vulcanization, the OTCO shall not be kept around materials such as cardboard or rubber etc. which generate sulfurous acid gas.

All Rights Reserved by Xiamen SET Electronics Co., Ltd. 2021-2023 V2.0

Lead Process

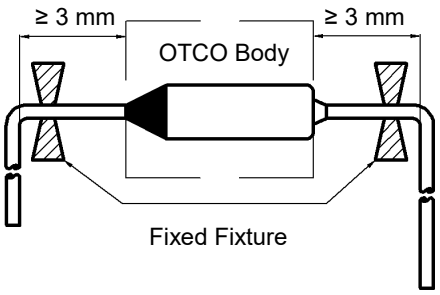

FIGURE 1

1. If lead wires has to be bent, it is important not to apply excessive pressure to the root of the lead wires. The tensile forces applied to the lead wires shall not exceed 15.7 N, and the thrust force applied to the lead wires shall not exceed 3.9 N.
2. The lead wires should be bent at a distance 3 mm or above from the body of OTCO (see Fig.1).
3. To avoid damaging the OTCO, when bending lead wires, please use pincher or similar tools to fix the OTCO.

Installation

Selection of Installation Location

1. Do not locate the OTCO in a place where severe vibration always occurs.
2. The infrared thermography or multiple thermocouples should be considered to detect the ambient temp. under normal and abnormal situation. The point that provides the biggest temp. rise between these two situations is the best installation location.

Make Sure the Temp. of Installation Location

1. The body of OTCO will generate heat as current flows through it, resulting the body temp. higher than ambient temp. The influence of temp. rise shall be considered in the design to determine the appropriate OTCO model.
2. It shall be ensured that the body temp. of OTCO and the ambient temp. at the installation position do not exceed the corresponding holding temp. T_h.
3. The end product should be tested to ensure that potential abnormal conditions do not cause ambient temp. to exceed the T_m of the OTCO.

Mounting OTCO

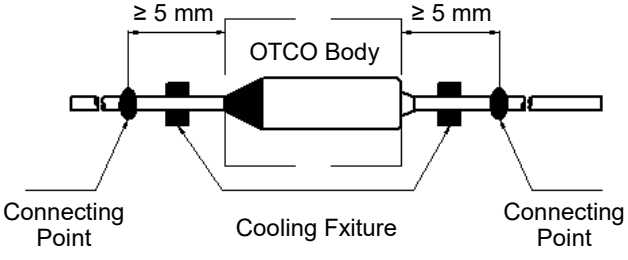

FIGURE 2

1. OTCO can be installed by soldering, welding, riveting or crimping. During and after installation, please do not pull, push or twist OTCO body or lead wires.
2. The connection point of the lead shall be no less than 5 mm away from the OTCO body (see Fig.2).
3. Try to ensure that the body of the OTCO is evenly heated. If the temp. difference is inevitable, make sure that the sealing resin side is connected close to the heat source.

All Rights Reserved by Xiamen SET Electronics Co., Ltd. 2021-2023 V2.0

Soldering

1. Soldering should be carried out according to below table. If secondary soldering is required, wait until the OTCO cools to room temp.
2. Soldering is not recommended for Thermal-Link with $T_f \leq 110°C$, while non heating processes such as crimping and riveting are recommended.
3. In the process of soldering, cooling fixture should be used between soldering point and OTCO body (see Fig.2).
4. It is recommended to take X-ray after soldering, to confirm that the thermal pellet has no shrinkage after soldering.

TABLE 1: Max. Allowable Soldering Time for Different Length of Soldering Point from OTCO Body

Rated Functioning Temp. (T_f)	Length	Time	Length	Time	Length	Time	Max. Soldering Temp.
(°C)	(mm)	(s)	(mm)	(s)	(mm)	(s)	(°C)
≤ 110	5	N / A	15	N / A	25	N / A	400
111 ~ 150	5	N / A	15	1	25	2	
151 ~ 190	5	1	15	2	25	3	
≥ 191	5	1	15	3	25	5	

Welding

1. Avoid welding current flowing into the inside of the OTCO. The welding current will cause the internal parts to be welded together, resulting in the failure function of OTCO.
2. During the welding process, the lead wires of the OTCO must be supported to avoid the damage of the OTCO.
3. In the process of welding, cooling fixture should be used between welding point and OTCO body (See Fig.2).
4. It is recommended to take X-ray after welding, to confirm that the thermal pellet has no shrinkage after welding.

Riveting or Crimping

1. Select materials with low resistance (such as copper) for riveting and crimping.
2. Contact resistance shall be as small as possible. Large contact resistance will cause high temp. to make OTCO open in advance.
3. It is better to crimp OTCO leads to stranded lead wires rather than solid wires as the stranded wire may be crimped tighter and maintain better electrical contact during temp. cycling.
4. During the riveting and crimping process, ensure that the lead wires shall not be reversed, sealing resin shall not be destroyed.
5. When the working temp. exceeds 150°C, soldering reinforcement is recommended after riveting and crimping.

The isolated lead is forbidden to contact OTCO body directly to avoid short circuit (See Fig.3).

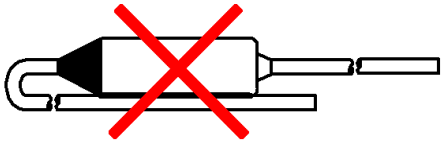

FIGURE 3

All Rights Reserved by Xiamen SET Electronics Co., Ltd. 2021-2023 V2.0