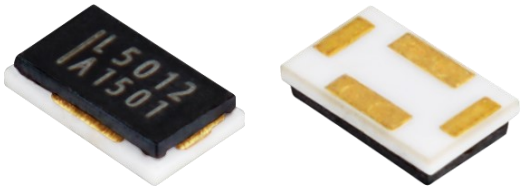

Description

Heat CutOff (HCO), also known as a three-terminal fuse, is an actuating component designed with overcurrent and overcharge protection functions. The main body of an HCO consists of FH, Fusible Alloy, Flux Resin, Case and Sealant Epoxy.

The Heat CutOff (HCO) is primarily used in secondary protection schemes for lithium battery charge and discharge circuits, providing redundant protection alongside the primary protection circuit. During the charge and discharge process of lithium batteries, if an abnormal overcurrent occurs, the fusible alloy self-heats and melts, disconnecting the charge and discharge circuit to achieve overcurrent protection. In the event of an overcharge, if the primary protection circuit's IC or the FET in the charge and discharge path fails, the secondary protection IC activates and energizes the Heater of the HCO. This causes the fusible alloy to melt due to the generated heat, disconnecting the charge and discharge circuit to provide overcharge protection. This mechanism ensures dual protection against both overcurrent and overcharge conditions.

The key features of SETsafe | SETfuse Heat CutOff (HCO) SHL series products include: Rated Currents of (12 / 15 / 30) A, Rated Voltages of 80 VDC, and an Operating Voltage Range of (3.8 ~ 62.0) VDC. These products have obtained UL, cUL and TUV certifications and comply with RoHS and REACH directives.

Structure Diagrams

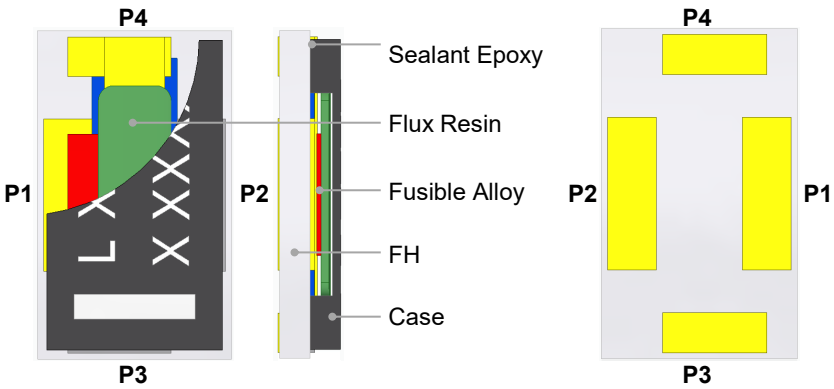

Product Schematic

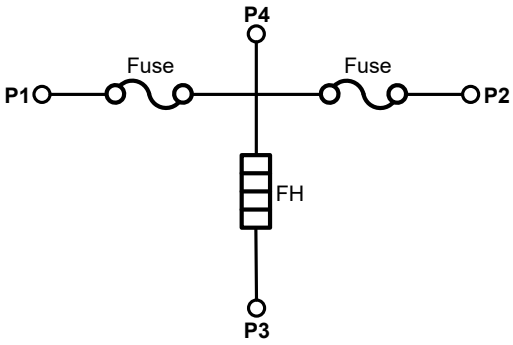

- P1 ~ P2 Main Circuit（MC）
- P1 / P2 / P4 ~ P3 Control Circuit（CC）

Application

- Sweeping robot
- Cordless vacuum cleaner
- Power tools
- Electric bicycle
- Electric car balance

Features

- Surface Mount
- Overcurrent Protection
- Overcharging Protection
- Low Impedance, Low Power Consumption
- Controlled Fusing Time ≤ 60 s
- Non-Resettable
- RoHS & REACH Compliant

All Rights Reserved by Xiamen SET Electronics Co., Ltd. 2024-2026 V1.4

Dimensions (Unit: mm)

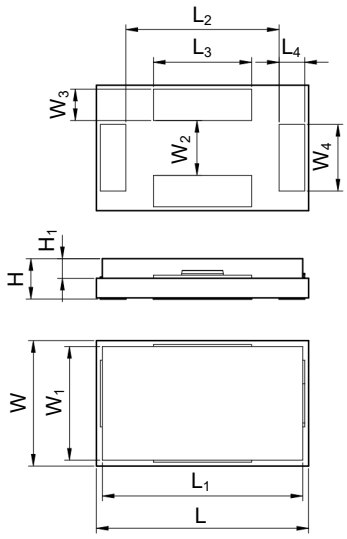

L	L_1	L_2	L_3	L_4	W	W_1	W_2	W_3	W_4	H	H_1
5.4 ± 0.2	5.1 ± 0.2	3.9 ± 0.2	2.5 ± 0.2	0.65 ± 0.2	3.2 ± 0.2	2.9 ± 0.2	1.4 ± 0.2	0.8 ± 0.2	1.7 ± 0.2	1.1 ± 0.15	0.5 ± 0.15

Marking

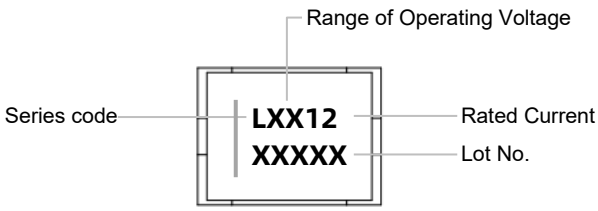

Part Number System

SHL - 5 0 1 2

Rated Current (A)
12, 15, 30

Rated Operating Voltage (VDC)
04, 06, 08, 12, 18, 20, 24, 30, 32, 40, 50

Series
SHL

All Rights Reserved by Xiamen SET Electronics Co., Ltd. 2024-2026 V1.4

Specifications

Model	I_r	U_r	Cells in Series (Selection Reference)	Breaking Capacity	Range of Operating Voltage	Resistance		Agency Information			RoHS REACH
						R_{Fuse}	R_{FH}	UL	cUL	TUV	
	(A)	(VDC)	(Cells)	(A)	(VDC)	(mΩ)	(Ω)				
SHL-0612	12	80	1	50	4.0 ~ 7.0	≤ 3.5	1.32 ~ 1.88	●	●	●	●
SHL-0812	12	80	2	50	4.0 ~ 9.0	≤ 3.5	1.37 ~ 1.88	●	●	●	●
SHL-1212	12	80	3	50	7.4 ~ 13.8	≤ 3.5	4.9 ~ 6.4	●	●	●	●
SHL-1812	12	80	4	50	10.4 ~ 19.6	≤ 3.5	10.2 ~ 12.7	●	●	●	●
SHL-2012	12	80	5	50	14.0 ~ 24.5	≤ 3.5	17.2 ~ 22.2	●	●	●	●
SHL-3012	12	80	6 ~ 7	50	17.4 ~ 32.9	≤ 3.5	27.8 ~ 35.6	●	●	●	●
SHL-4012	12	80	11 ~ 12	50	26.4 ~ 48.0	≤ 3.5	59.1 ~ 77.4	●	●	●	●
SHL-5012	12	80	13 ~ 14	50	42.0 ~ 62.0	≤ 3.5	109.9 ~ 163.3	●	●	●	●
SHL-0615	15	80	1	50	4.0 ~ 7.0	≤ 3.0	1.32 ~ 1.88	●	●	●	●
SHL-0815	15	80	2	50	4.0 ~ 9.0	≤ 3.0	1.37 ~ 1.88	●	●	●	●
SHL-1215	15	80	3	50	7.4 ~ 13.8	≤ 3.0	4.9 ~ 6.4	●	●	●	●
SHL-1815	15	80	4	50	10.4 ~ 19.6	≤ 3.0	10.2 ~ 12.7	●	●	●	●
SHL-2015	15	80	5	50	14.0 ~ 24.5	≤ 3.0	17.2 ~ 22.2	●	●	●	●
SHL-3015	15	80	6 ~ 7	50	17.4 ~ 32.9	≤ 3.0	27.8 ~ 35.6	●	●	●	●
SHL-4015	15	80	11 ~ 12	50	26.4 ~ 48.0	≤ 3.0	59.1 ~ 77.4	●	●	●	●
SHL-5015	15	80	13 ~ 14	50	42.0 ~ 62.0	≤ 3.0	137.3 ~ 200.4	●	●	●	●

All Rights Reserved by Xiamen SET Electronics Co., Ltd. 2024-2026 V1.4

Model	I_r	U_r	Cells in Series (Selection Reference)		Breaking Capacity	Range of Operating Voltage	Resistance		Agency Information			RoHS REACH
							R_{Fuse}	R_{FH}	UL	cUL	TUV	
	(A)	(VDC)	(Cells)	LFP	(A)	(VDC)	(mΩ)	(Ω)				
SHL-0430	30	80	1		80	3.8 ~ 5.5	≤ 2.5	0.76 ~ 1.05	●	●	●	●
SHL-0830	30	80	2		80	6.6 ~ 9.6	≤ 2.5	2.14 ~ 3.11	●	●	●	●
SHL-1230	30	80	3		80	9.5 ~ 14.4	≤ 2.5	4.8 ~ 6.7	●	●	●	●
SHL-1830	30	80	4		80	13.2 ~ 19.2	≤ 2.5	8.4 ~ 12.4	●	●	●	●
SHL-2030	30	80	5		80	17.1 ~ 24.0	≤ 2.5	13.4 ~ 20.9	●	●	●	●
SHL-2430	30	80	6 ~ 7		80	19.8 ~ 31.5	≤ 2.5	22.1 ~ 29.0	●	●	●	●
SHL-3030	30	80	7 ~ 8		80	23.0 ~ 33.6	≤ 2.5	28.2 ~ 39.2	●	●	●	●
SHL-3230	30	80	8		80	26.4 ~ 38.4	≤ 2.5	36.9~ 49.8	●	●	●	●
SHL-4030	30	80	9 ~ 10		80	34.2 ~ 48.0	≤ 2.5	67.8 ~ 90.0	●	●	●	●
SHL-5030	30	80	12 ~ 14	15 ~ 17	80	40.0 ~ 62.0	≤ 2.5	87.4 ~ 114.2	●	●	●	●
Current Carrying Capacity	100% x I_r, no melting											
Controlled Fusing Time	In operation voltage range, the fusing time is <1min											
Current Fusing Time	200% x I_r the fusing time is < 1 min											
Endurance Test	500% x I_r power on 5 ms, power off 995 ms, 100,000 cycles											
Working Temperature Range	-20 ~ 85 ℃											

Note:

1. For P1 - P2, please refer to the structure diagram.

All Rights Reserved by Xiamen SET Electronics Co., Ltd. 2024-2026 V1.4

Soldering Parameters

1. Reflow Soldering Method (For Reference Only)

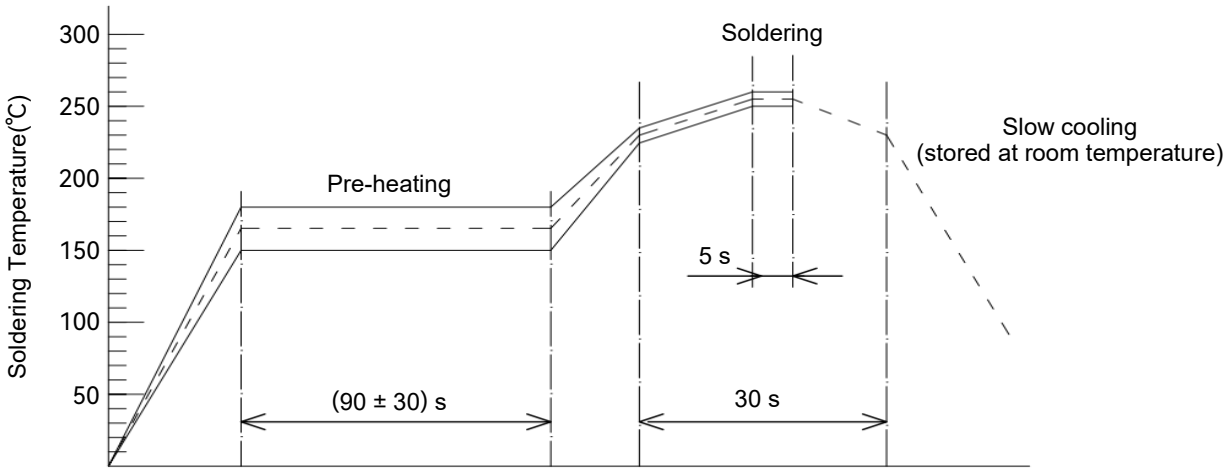

Peak Temp: (255 ± 5)°C 5 s
(230 ± 5)°C 30 s

2. Recommended Hand Soldering Parameters

Solder Iron Temp: (400 ± 5) ℃
Soldering Time: (3 ± 1) s

Recommended mounting size (Unit: mm)

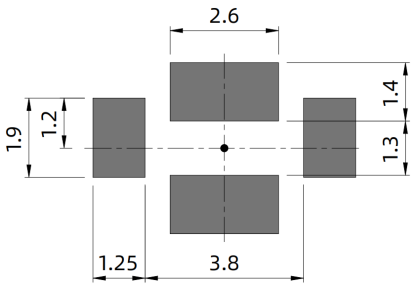

Note: This is only the recommended size and does not guarantee the mounting quality. Please verify it in combination with your company's design guidelines.

All Rights Reserved by Xiamen SET Electronics Co., Ltd. 2024-2026 V1.4

Recommended Test PCB Board

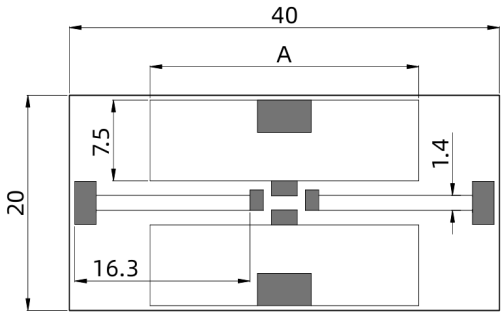

Rated Current	Materials	Base Thickness	Copper Width	Copper Thick-ness	Number Of board layers
12 A	FR-4	0.6 mm	2.0 mm	2.0 OZ (70 um)	Single Sided Board
15 A	FR-4	0.6 mm	3.5 mm	2.0 OZ (70 um)	Single Sided Board
30 A	FR-4	0.6 mm	25 mm	2.0 OZ (70 um)	Single Sided Board

All Rights Reserved by Xiamen SET Electronics Co., Ltd. 2024-2026 V1.4

Current-Time Curve (Reference)

The Current-Time curve shows functioning time at multi-times rated current at room temperature.

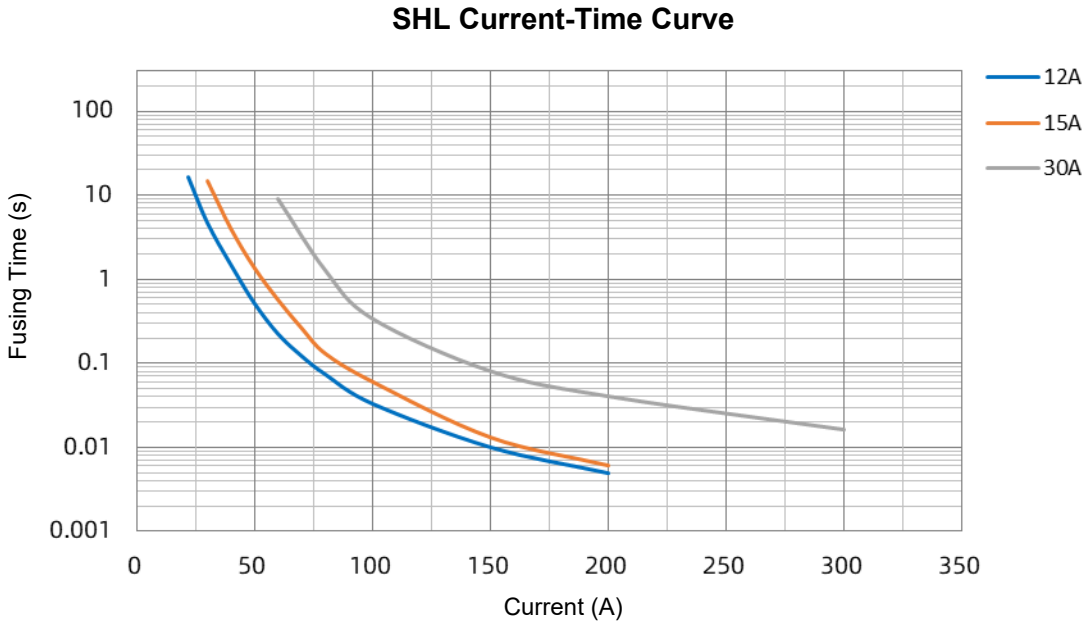

Current Carrying Capacity (Reference)

Under different temperatures apply test current, the surface temperature is 100 °C as the highest point, and the load value is obtained.

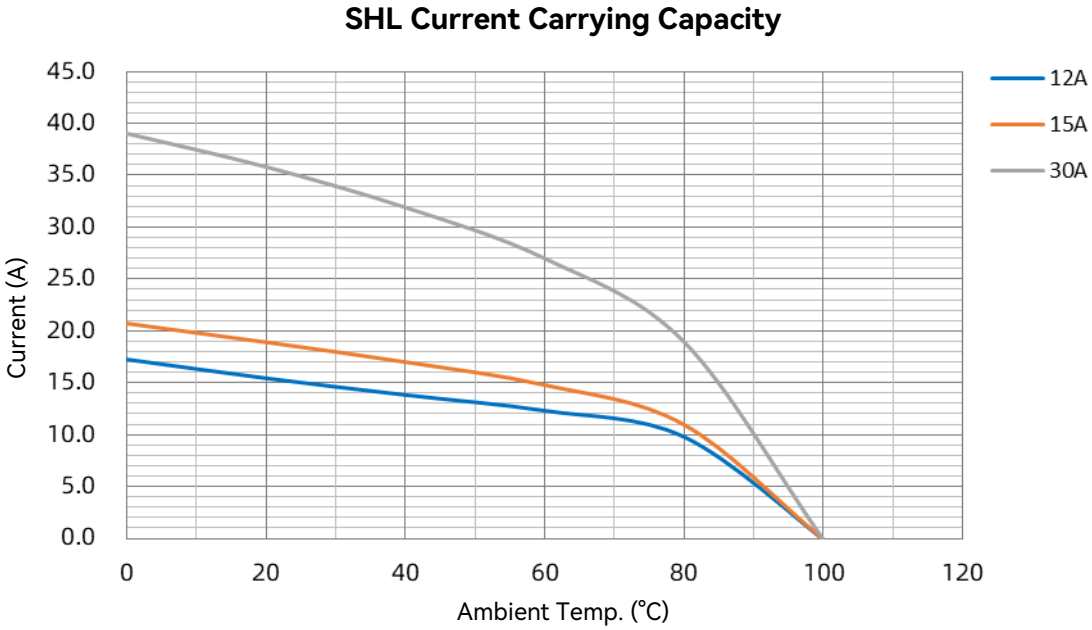

*Note:

1. The values in the table are typical values that we recommend to test PCB board evaluation, Reference product resistances: 3.3 mΩ (12 A), 2.6 mΩ (15 A), 1.6 mΩ (30 A);
2. Product specifications may be adjusted due to technical upgrades or optimization requirements. Updates will not be notified separately.

All Rights Reserved by Xiamen SET Electronics Co., Ltd. 2024-2026 V1.4

Power-temp. curve (Reference)

At different temperatures, the heating element applies an operating voltage corresponding to the power, and collects the disconnection time of P1 - P2.

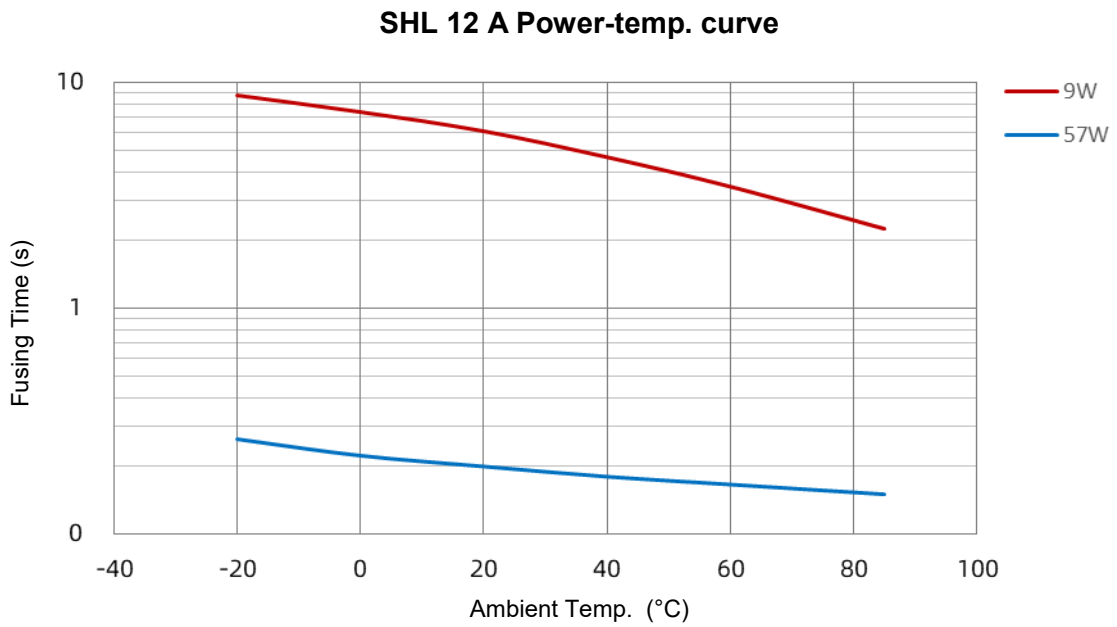

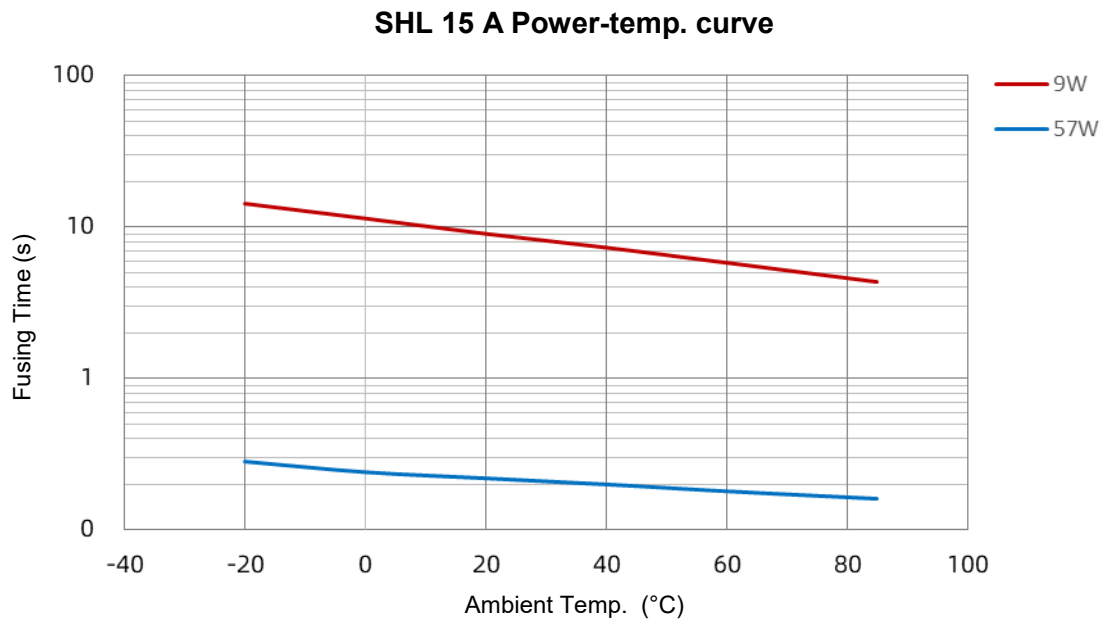

All Rights Reserved by Xiamen SET Electronics Co., Ltd. 2024-2026 V1.4

Power-temp. curve (Reference)

At different temperatures, the heating element applies an operating voltage corresponding to the power, and collects the disconnection time of P1 - P2.

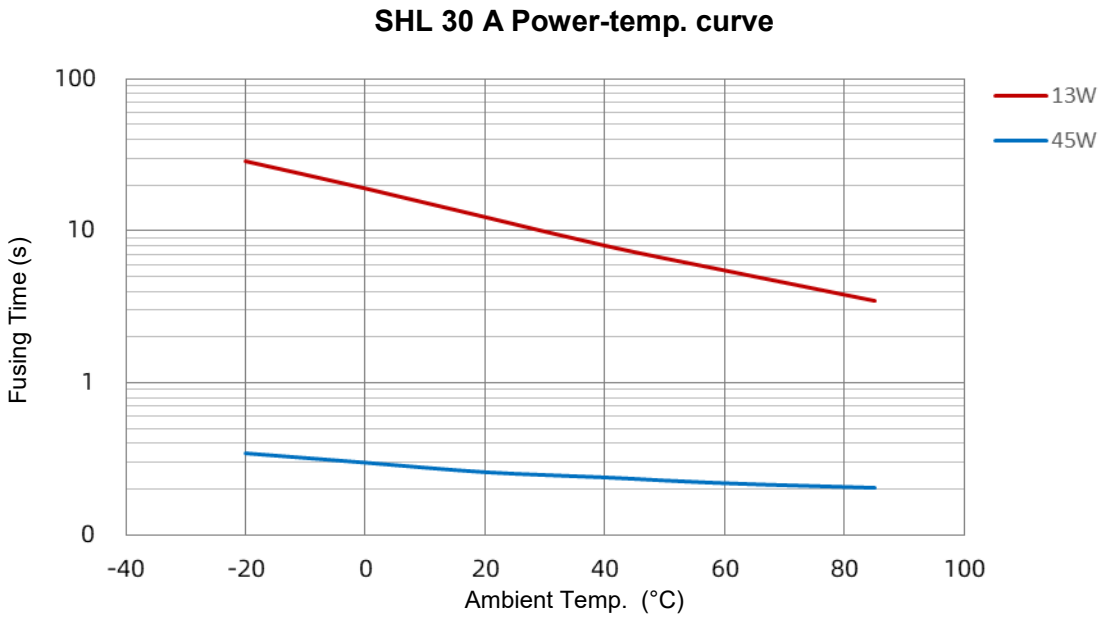

Power-Time Curve (Reference)

At room temperature, apply the operating voltage within the power range of the heating element, and collects the disconnection time of P1 - P2.

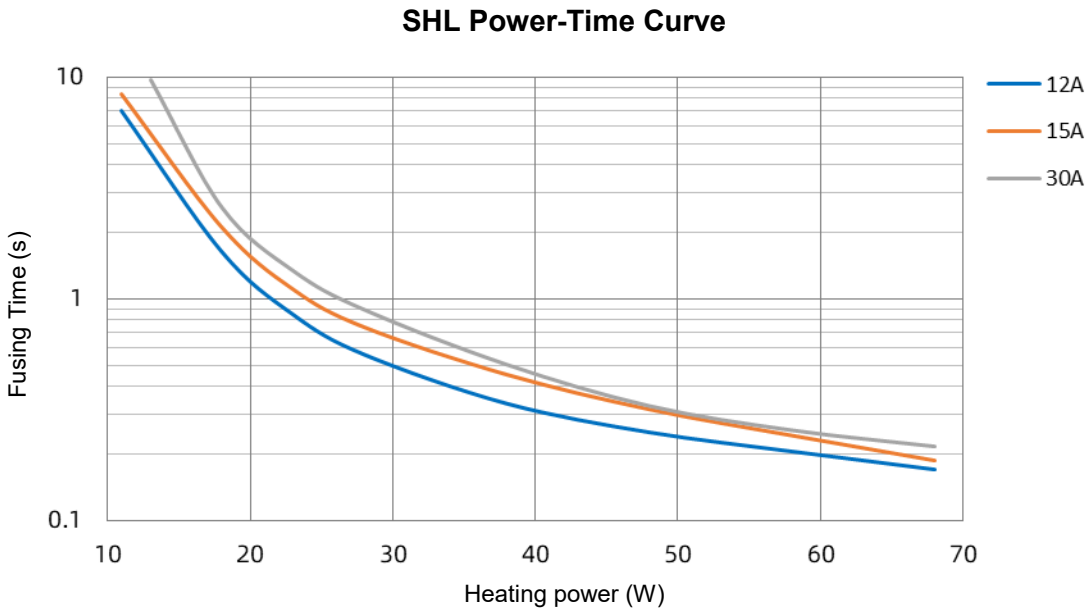

All Rights Reserved by Xiamen SET Electronics Co., Ltd. 2024-2026 V1.4

Temp.-Time Curve (Reference)

Under different conditions, Test the disconnection time curve of P1-P2 under 2 times overload current.

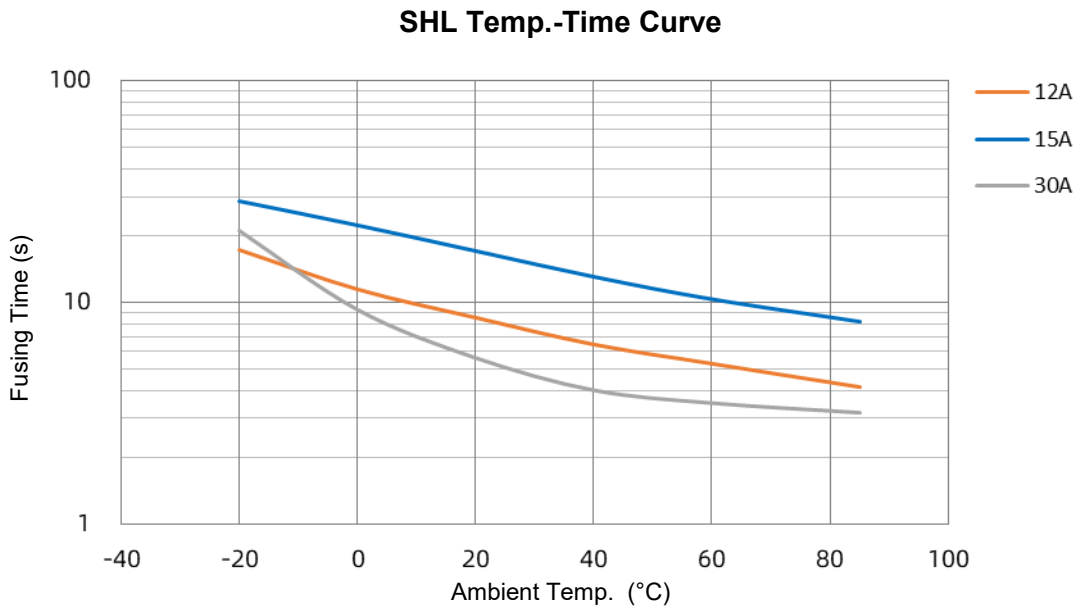

I²t-t Curve (Reference)

At room temperature, collects the disconnection time of P1 - P2 under multiples of overload current, curve obtained by the product of squared current and disconnection time.

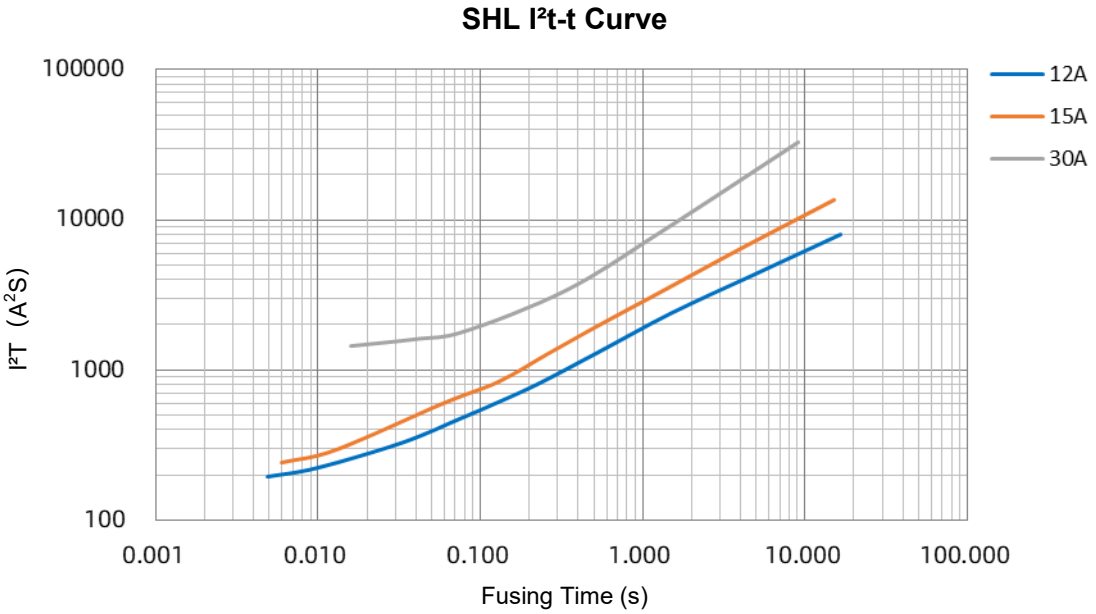

*Note:

1. The values in the table are typical values that we recommend to test PCB board evaluation, Reference product resistances: 3.3 mΩ (12 A), 2.6 mΩ (15 A), 1.6 mΩ (30 A);
2. Product specifications may be adjusted due to technical upgrades or optimization requirements. Updates will not be notified separately.

All Rights Reserved by Xiamen SET Electronics Co., Ltd. 2024-2026 V1.4

Packaging Information

Item	Reel	Carton
Dimensions (mm)	Φ 300 × 12.5	325 × 255 × 340
Quantity (PCS)	5000	65000
Gross Weight (kg)	0.58 ± 5 %	8 ± 5 %

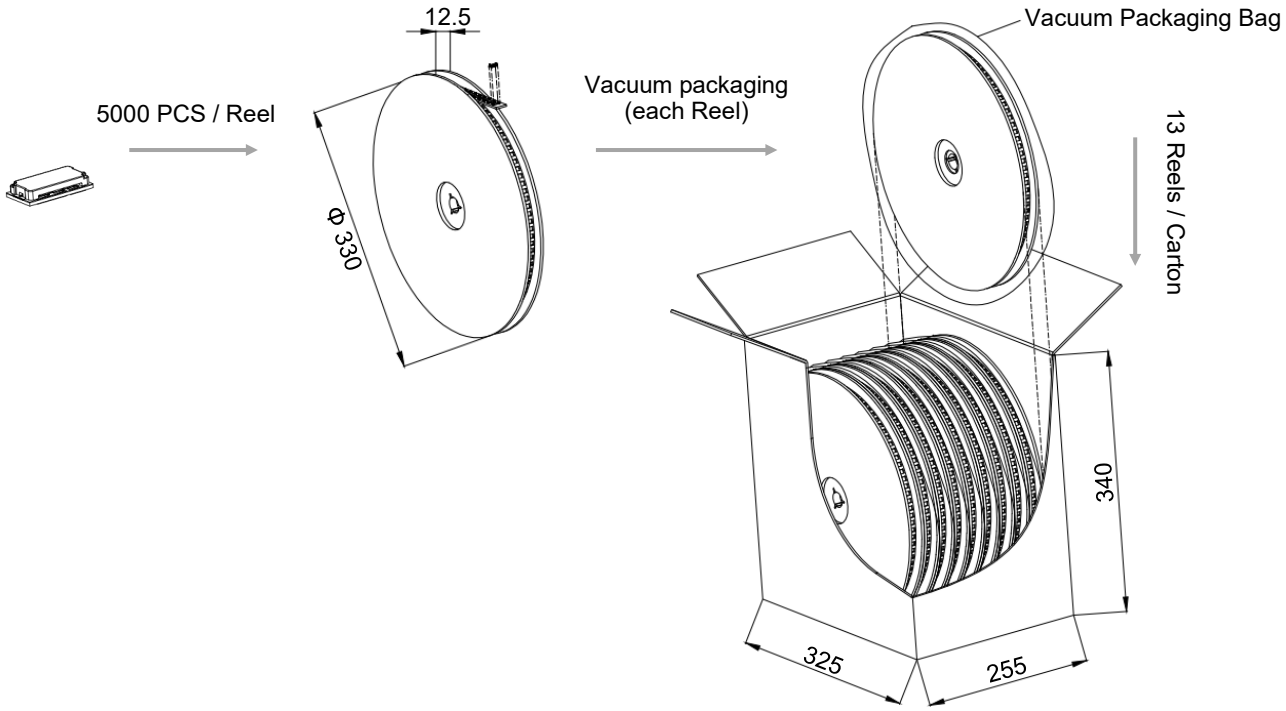

All Rights Reserved by Xiamen SET Electronics Co., Ltd. 2024-2026 V1.4

Glossary

Item	Description
HCO	**Heat CutOff (HCO)** With Feed Heater，A Protector that turns on a Feed Heater to cut off circuit.
MC	**Main Circuit (MC)** All conductive components used in switching devices for closing or disconnecting circuits in a circuit.
CC	**Control Circuit (CC)** In addition to the main circuit, all conductive parts of the switching apparatus used in the access circuit as the closing operation and / or opening operation of the switching apparatus.
I_r	**Rated Current** The current used to classify an HCO, which is the Maximum current that HCO allows to carry and is able to cut off the circuit safely.
U_r	**Rated Voltage** The voltage used to classify an HCO, which is the Maximum voltage that HCO allows to carry and is able to cut off the circuit safely.
FH	**Feed Heater** Electric appliances that use electric energy to achieve heating effect.
Breaking Capacity	**Breaking Capacity** Value of prospective current that a fuse-link is capable of breaking at a stated voltage under prescribed conditions of use and behavior.
Range of Operation Voltage	**Range of Operation Voltage** Under specified conditions, the protector can operate normally to disconnect the voltage.

All Rights Reserved by Xiamen SET Electronics Co., Ltd. 2024-2026 V1.4

ATTENTION

Usage

1. When atmosphere press is from 80 kPa to 106 kPa, the related altitude shall be from 2,000 meter to -500 meter.
2. Do not touch the HCO body or electrode lead directly when power is on, to avoid burning or electric shocking.
3. It is necessary to foresee there are possibilities that “Current Carrying Capacity” and “Controlled Fusing Time” may be varied along with the condition change in the substrate thermal capacity, etc. therefore you should check it on your PCB. Generally, when thermal capacity of PCB increases, Current carrying capacity will increase accordingly and Cleaning-time will be longer.
4. This product is designed and produced for only general-use of electronics devices. Therefore, we do not suppose that it is used for the. applications [Military, Medical and so on] which may cause direct damages on life, bodies or properties of third party.

Installation

1. Surface mounting.
2. Do not apply mechanical stress to the protection body during or after the installation.
3. Ultrasonic-cleaning or immersion-cleaning and so on must not be done to HCO before and after mounted. When cleaning is done, flux on element would flow, and it would not meet its specification. Moreover, a similar influence happens when the product comes in contact with cleaning-solution. These products after cleaning will not be guaranteed.
4. Please do not re-use of the HCO removed.
5. Please avoid doing resin-coating for HCO. The resin might infiltrate into the product, and it doesn’t meet the specification when the resin-coating is done to this product. These products after resin-coating will not be guaranteed.
6. Make sure that the terminals of this product are connected properly on the circuit board, P4 is a useless electrode that forms a resistance circuit with P3, but does not form a resistance circuit with P1 and P2. Attention should be paid to identification during installation.

All Rights Reserved by Xiamen SET Electronics Co., Ltd. 2024-2026 V1.4

Replacement

HCO is a non-repairable product. For safety aspect, it shall be replaced by an equivalent HCO, and mounted in the same way.

Storage

1. HCO must be stored in shaded area where it is not too dusty, with temp. (10 to 30) °C or less with no sudden temperature change, humidity within (30 to 70) % RH, and no corrosive gas in the air. please use them up within 1 year after receiving the goods .

All Rights Reserved by Xiamen SET Electronics Co., Ltd. 2024-2026 V1.4

Heat CutOff (HCO) Features & Model List Overview

Rated Operation Voltage (V)	SKT				SHP			
96	SKT-96120	SKT-96150	SKT-96120P	SKT-96150P	○	○	○	○
84	SKT-84120	SKT-84150	SKT-84120P	SKT-84150P	SHP-8430	SHP-8445	SHP-8460	SHP-8475
72	SKT-72120	SKT-72150	SKT-72120P	SKT-72150P	SHP-7230	SHP-7245	SHP-7260	SHP-7275
60	SKT-60120	SKT-60150	SKT-60120P	SKT-60150P	○	○	○	○
50	SKT-50120	SKT-50150	SKT-50120P	SKT-50150P	SHP-5030	SHP-5045	SHP-5060	SHP-5075
48	○	○	○	○	SHP-4830	SHP-4845	SHP-4860	SHP-4875
40	SKT-40120	SKT-40150	SKT-40120P	SKT-40150P	SHP-4030	SHP-4045	SHP-4060	SHP-4075
32	○	○	○	○	○	SHP-3245	SHP-3260	SHP-3275
30	SKT-30120	SKT-30150	SKT-30120P	SKT-30150P	SHP-3030	SHP-3045	SHP-3060	SHP-3075
24	○	○	○	○	SHP-2430	SHP-2445	SHP-2460	○
20	SKT-20120	SKT-20150	SKT-20120P	SKT-20150P	SHP-2030	SHP-2045	SHP-2060	SHP-2075
18	○	○	○	○	○	○	○	○
14	SKT-14120	SKT-14150	SKT-14120P	SKT-14150P	○	SHP-1445	SHP-1460	SHP-1475
12	SKT-12120	SKT-12150	SKT-12120P	SKT-12150P	SHP-1230	SHP-1245	SHP-1260	SHP-1275
08	○	○	○	○	○	○	○	○
06	○	○	○	○	SHP-0630	SHP-0645	SHP-0660	○
04	○	○	○	○	SHP-0430	SHP-0445	SHP-0460	○
I_r (A) Rated Current	120	150	120	150	30	45	60	75
U_r (VDC) Rated Voltage	125				100			
Breaking Capacity (A)	1000				80	120	180	200
Product Structure	Screw Fastening		DIP		SMD			

Series

Model

All Rights Reserved by Xiamen SET Electronics Co., Ltd. 2024-2026 V1.4

Heat CutOff (HCO) Features & Model List Overview

Rated Operation Voltage (V)	SHL			SHJ			SHG	
96	○	○	○	○	○	○	○	○
84	○	○	○	○	○	○	○	○
72	○	○	○	○	○	○	○	○
60	○	○	○	○	○	○	○	○
50	SHL-5012	SHL-5015	SHL-5030	SHJ-5012	SHJ-5015	SHJ-5022	○	○
48	○	○	○	○	○	○	○	○
40	SHL-4012	SHL-4015	SHL-4030	SHJ-4012	SHJ-4015	SHJ-4022	SHG-4005	SHG-4012
32	○	○	SHL-3230	SHJ-3212	SHJ-3215	SHJ-3222	SHG-3205	SHG-3212
30	SHL-3012	SHL-3015	SHL-3030	SHJ-3012	SHJ-3015	SHJ-3022	SHG-3005	SHG-3012
24	○	○	SHL-2430	SHJ-2412	SHJ-2415	SHJ-2422	○	SHG-2412
20	SHL-2012	SHL-2015	SHL-2030	SHJ-2012	SHJ-2015	SHJ-2022	SHG-2005	SHG-2012
18	SHL-1812	SHL-1815	SHL-1830	○	○	○	○	○
14	○	○	○	SHJ-1412	SHJ-1415	SHJ-1422	SHG-1405	SHG-1412
12	SHL-1212	SHL-1215	SHL-1230	SHJ-1212	SHJ-1215	SHJ-1222	SHG-1205	SHG-1212
08	SHL-0812	SHL-0815	SHL-0830	SHJ-0812	SHJ-0815	SHJ-0822	SHG-0805	SHG-0812
06	SHL-0612	SHL-0615	○	○	○	○	○	○
04	○	○	SHL-0430	SHJ-0412	SHJ-0415	SHJ-0422	SHG-0405	SHG-0412
I_r (A) Rated Current	12	15	30	12	15	22	5	12
U_r (VDC) Rated Voltage	80			48 / 80			36	
Breaking Capacity (A)	50		80	200 / 50			50	
Product Structure	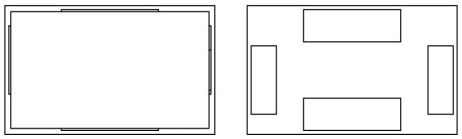			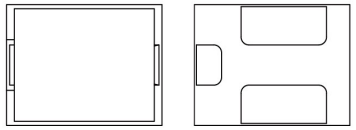			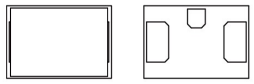	

Series

Model

SMD

All Rights Reserved by Xiamen SET Electronics Co., Ltd. 2024-2026 V1.4